Form No. 3376-352 Rev A

Mulching Kit

30in TurfMaster Walk-Behind Lawn Mower

Model No. 125-5064

Installation Instructions

Loose Parts

Use the chart below to verify that all parts have been shipped.

Description	Qty.	Use
Mulch baffle assembly Carriage bolt (5/16 x 3/4 inch) Flange locknut (5/16 inch) Flange-head bolt (1/4 x 1/2)	1 3 4 1	Install the mulching kit.
No parts required	–	Convert to side-discharge operation (as needed).

Installing the Mulching Kit

⚠ WARNING

If you leave the wire on the spark plug, someone could accidentally start the engine. Accidental starting of the engine could seriously injure you or other bystanders.

Disconnect the wire from the spark plug before you do any maintenance. Set the wire aside so that it does not accidentally contact the spark plug.

Note: Determine the left and right sides of the machine from the normal operating position.

1. Park the machine on a level surface.
2. Make sure that all moving parts have stopped and the machine has cooled.
3. Remove the spark-plug wire before starting these instructions.
4. Remove the grass bag or side discharge chute from the machine, whichever your machine is currently equipped with, along with its hardware.
5. Tip the unit onto its right side.
6. Clean out any grass buildup from underside of deck.
7. Remove and retain the flow control baffle from the front of the deck (Figure 1) and hardware.

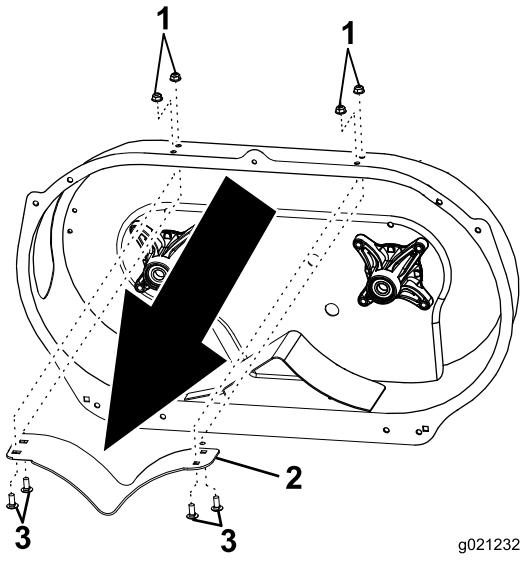

Figure 1

Removing original hardware

1. Nut
2. Flow control baffle
3. Carriage bolt

8. Install the mulch baffle assembly as shown in Figure 2.

© 2013—The Toro® Company
8111 Lyndale Avenue South
Bloomington, MN 55420

Register at www.Toro.com.

Original Instructions (EN)
Printed in the USA
All Rights Reserved

3376-352 A

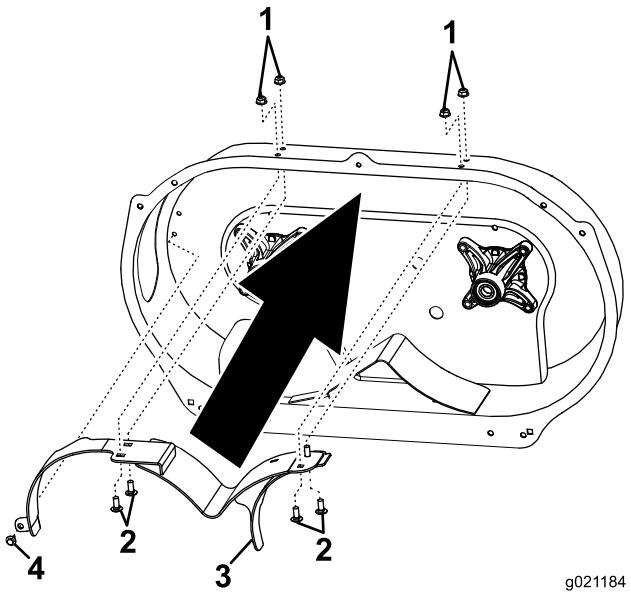

Figure 2
Installing new hardware

1. Flange locknut (5/16 inch)
2. Carriage Bolt (5/16 x 3/4 inch)
3. Rear-discharge plug
4. Flange-head bolt (1/4 x 1/2 inch)

9. Install the discharge cover onto the machine.

   Note: You will have an extra bolt, as the flange-head bolt that comes with this kit will replace one of the bolts that mount the discharge cover to the machine.

10. Install the rear-discharge plug by griping the handle, raising the rear deflector, and inserting it into the rear-discharge chute until the latch locks into place (Figure 3).

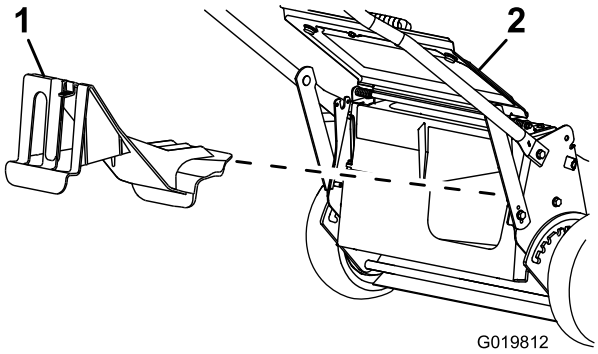

Figure 3

1. Rear-discharge plug
2. Rear deflector

11. Tighten all the fasteners.
12. Carefully place the unit in the normal operating position.
13. Connect the spark-plug wire.

Note: An optional low lift blade (P/N 120-9500) may work better in certain mulching conditions. Refer to the mower operator's manual for blade maintenance.

Converting to Side-Discharge Operation

To convert the mower back to side-discharge operation, complete the following procedure:

1. Park the machine on a level surface.
2. Make sure that all moving parts have stopped and the spark plug wire has been disconnected.

   Note: Allow the unit to cool before starting these instructions.

3. Remove the bagger from the unit if equipped.
4. Tip the unit rearward onto its handle.
5. Clean out any grass buildup from underside of deck.
6. Remove the side discharge cover.
7. Remove the mulch baffle assembly and its hardware.
8. Install standard blades if low-lift blades were used.
9. Install the flow control baffle and its hardware.
10. Install the side discharge chute and its hardware.

⚠ DANGER

An uncovered discharge opening will allow objects to be thrown in the direction of the operator or bystanders. Also, contact with the blades could occur. Thrown objects or blade contact can cause serious injury or death.

Never operate the machine without the side-discharge deflector or side-discharge chute in place and working properly.

11. Install the bagger or rear-discharge plug from the machine.

⚠ WARNING

Ensure that either the rear-discharge plug or the grass bag has been installed before you turn on the machine. Never engage the blades without either the rear-discharge plug or the grass bag installed.