Customer Service Bulletin
Commercial Business Group

Workman® 3000 and 4000 Vehicles

Model/Serial Range:	Model Number:	Serial Numbers:
	ALL	00000-99999

Subject: **Availability of a High Air Intake Kit.**

When operating in extremely dusty and dirty conditions or if material overflows when loading the cargo bed, debris can buildup in the radiator air intake area and become pulled into the air cleaner canister. This debris must be removed regularly to prevent plugging of the air filter element. As an enhancement, High Air Intake Kit (93-8937) is now available for all Workman Liquid Cooled Vehicles. The kit positions the air intake directly behind the passenger seat frame. This location allows the engine to draw air from a cleaner environment, reducing the possibility of debris accumulating in the air filter canister.

NOTE: All maintenance intervals related to the Air Cleaner and Radiator still apply as outlined in the operators manual.

HIGH AIR INTAKE KIT (93-8937)

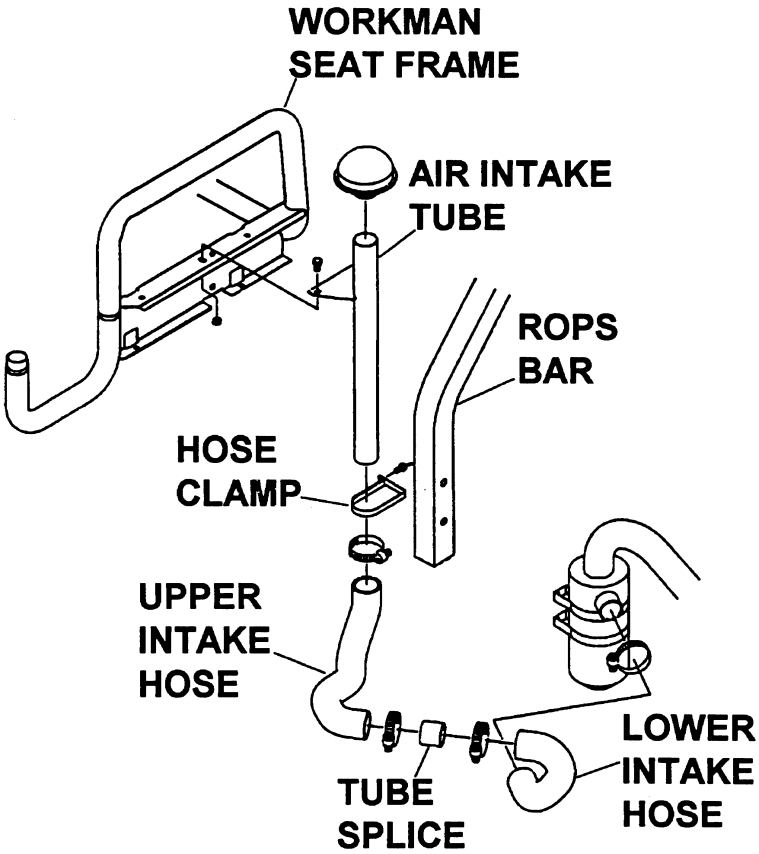

Ref: 03-01 Copyright©, 1995. The Toro Company