Customer Service Bulletin
Commercial Business Group

Groundsmaster® 300 Series

Model/Serial Range:	Model Number:	Serial Numbers:
	30772	00000-99999

Subject: **Seat Suspension Update.**

The suspension in Deluxe Suspension Seat Kit (Model #30772) now has two Secondary Springs to provide additional suspension. The Secondary Springs control the last 1-2 inches of seat suspension travel and improves the ride for heavy operators.

Secondary Springs are available and can be installed on earlier Seat Kits using the parts listed in the quantities below. The new parts are circled in the diagram below for easier identification. Parts are available through your local Toro distributor.

2)	93-3163	Spring
2)	93-3164	Cap
1)	93-3165	Bracket
1)	322-6	Screw
1)	3217-6	Nut
1)	3253-33	Lockwasher

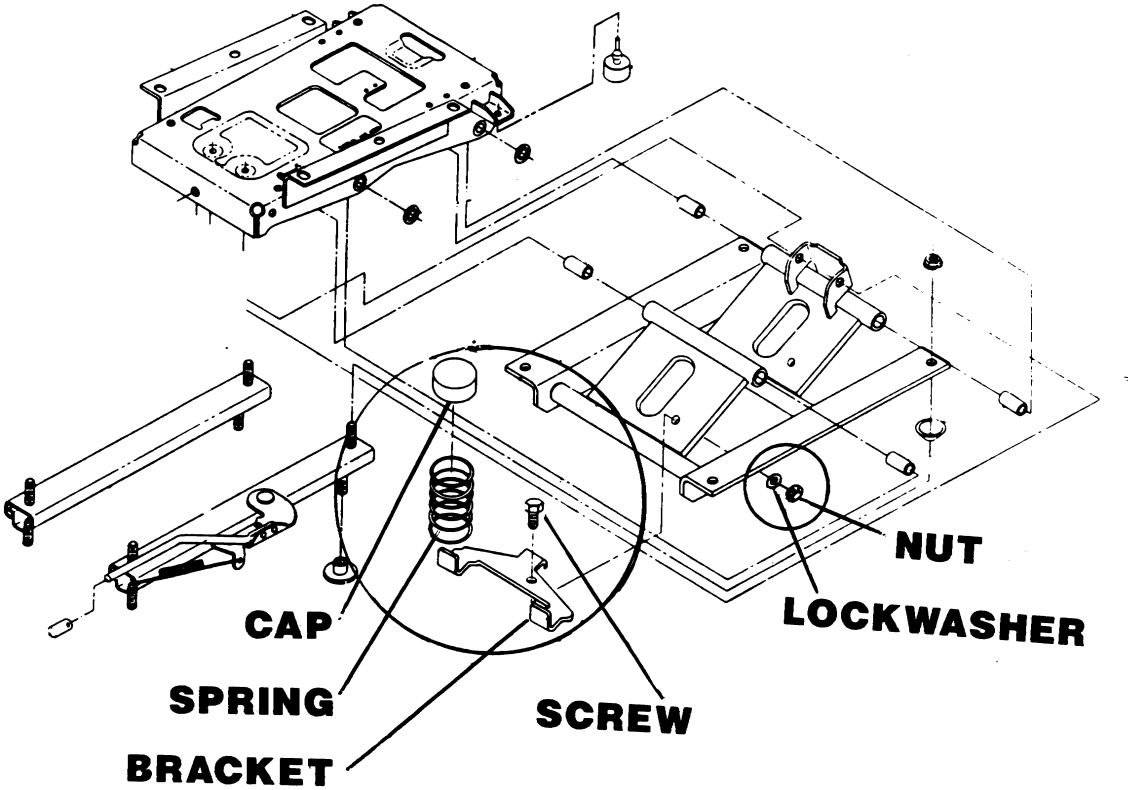

Ref: 02-01 Copyright©, 1994. The Toro Company