Customer Service Bulletin
Toro Commercial Products Division

Greensmaster® 3200-D

Model/Serial Range:	**Model Number:**	**Serial Number:**
	04381	50101-70374

Subject: Engine Fan generates debris in dusty conditions

Dust and debris may become air borne in dry conditions due to the turbulence created by the engine fan. To reduce the turbulence caused by the Engine Fan a Dust Shield is now available for installation on the units listed in this bulletin. Dust Shield (94-8156) is easily installed as shown in the instructions below. Parts and assistance with the installation is available through your local Toro distributor.

Installation Instructions:

Install Dust Shield (94-8156) using two (2) Hex Head Cap Screws (32144-14). Use the picture and drawing below to assist in the positioning of the parts.

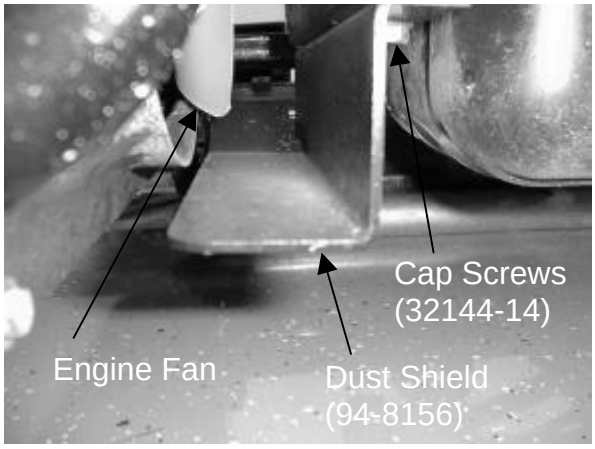

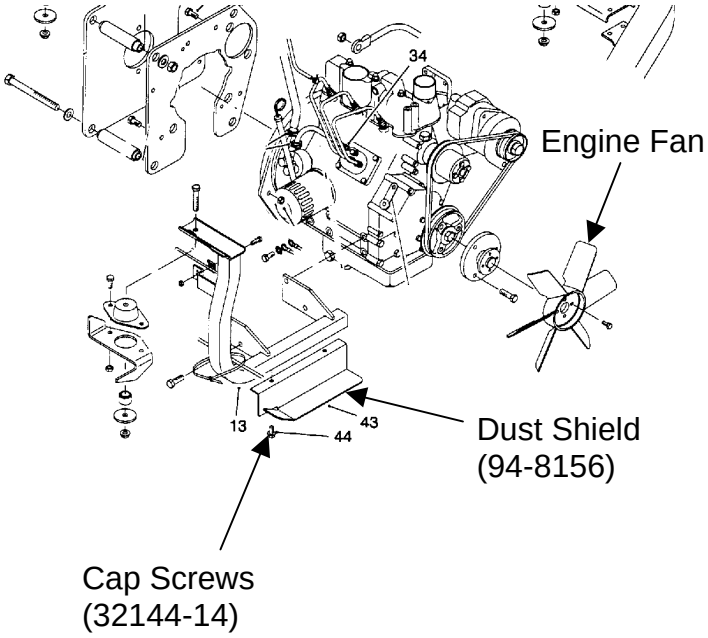

Ref: 03-03 Copyright©, 1997. The Toro Company