FORM NO. 106-1200

MODEL NO. 41107-210000235 & UP	PARTS CATALOG

MULTI PRO® 1200 VEHICLE

⚠ SAFETY AND INSTRUCTION DECALS

The following safety and instruction decals are installed on the vehicle. If any become damaged or illegible, replace them. Decal part numbers are listed below and in the parts catalog. Order replacements from your Authorized TORO Distributor.

Part No. 62-5550: Located on Front of Front Console.

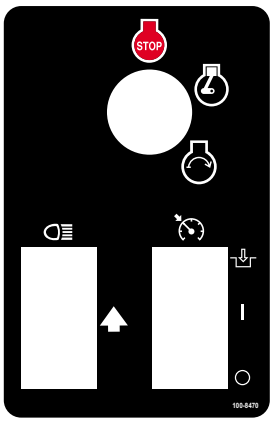

Part No. 100-8470: Located on Upper Left Console.

Part No. 100-6775: Located on Top of Fuel Tank.

Part No. 104-7628: Located on Left Side of Dash Panel.

Part No. 87-0570: Located on Rear Tank Band.

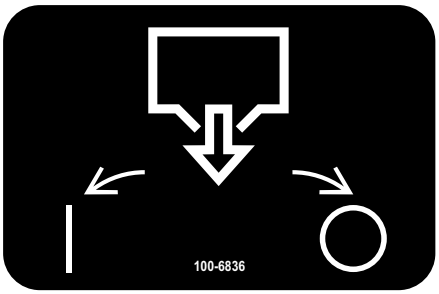

Part No. 100-6836: Located on Tank by Tank Drain Handle.

©The TORO Company - 2002
All Rights Reserved

⚠ SAFETY AND INSTRUCTION DECALS

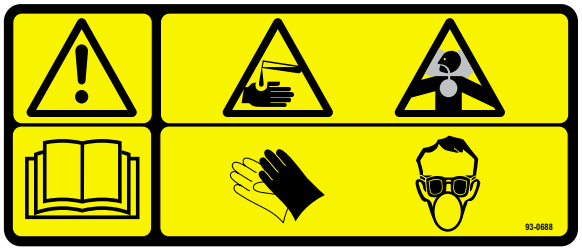

Part No. 93-0688: Located on
Spray Tank Lid.

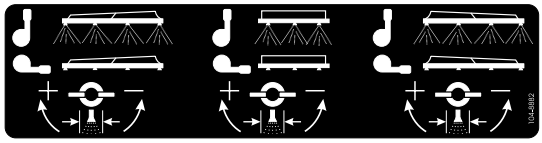

Part No. 104-8882: Located on
Spray Valve Console Top.

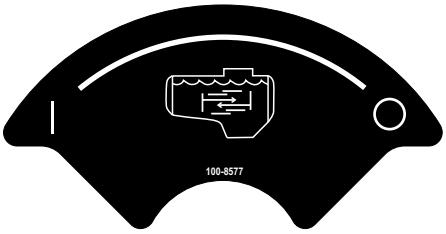

Part No. 100-8577: Located on
Agitation Valve.

Part No. 100-8621:
Located on Dash Panel.

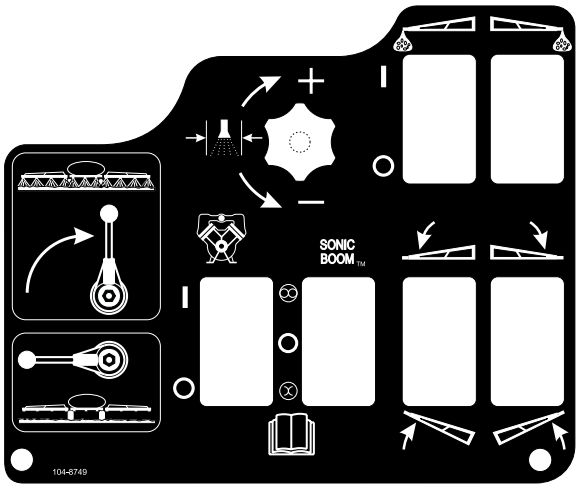

Part No. 104-8749: Located on
Spray Valve Console Top.

⚠ SAFETY AND INSTRUCTION DECALS

Part No. 104-8750: Located on Lower Front of Front Console.

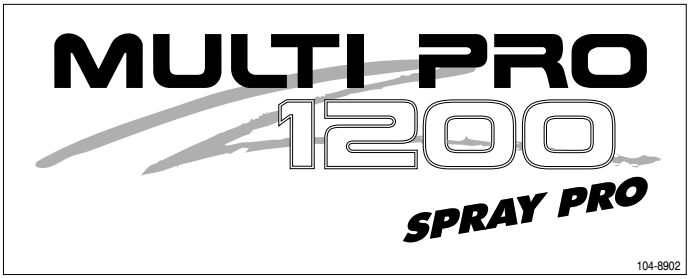

Part No. 104-8902: Located on Right Fender

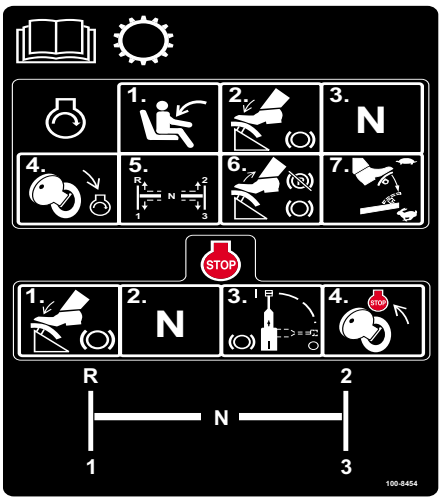

Part No. 100-8454: Located on Lower Left Console.

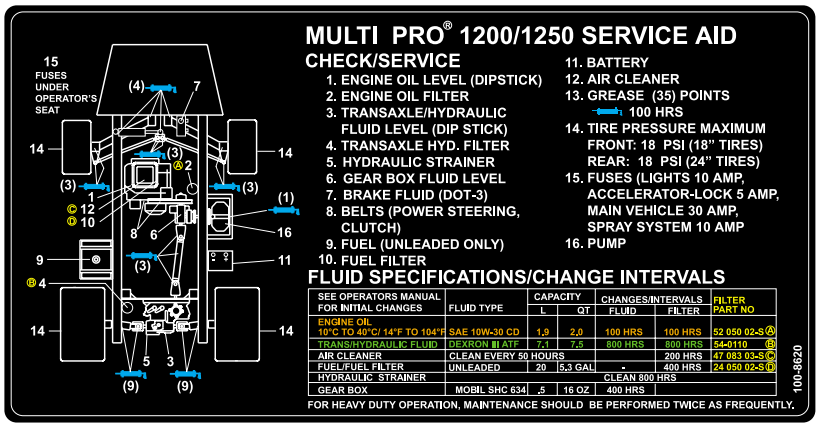

Part No. 100-8620: Located On Seat Box.

PRODUCT CHANGES

In an effort to make improvements available to TORO owners as quickly as possible, minor changes are incorporated into Toro's Products from time to time that do not become immediately shown in the Parts Catalog. If such a change has been made in your unit which is not reflected in your manual, see your TORO distributor or his Authorized TORO Service Dealer for information and part numbers.

IDENTIFICATION AND ORDERING

MODEL AND SERIAL NUMBERS:

The Multi Pro® 1250 Vehicle has two identification numbers; a model number and a serial number. The two numbers are printed on a decal which is located below the dash on the upright frame member on the right side of the vehicle. In any correspondence concerning the unit, supply the model number and the serial numbers to ensure correct information and replacement parts are obtained.

To order replacement parts from an Authorized TORO Service Dealer, supply the following information:
1. Model and serial number of your Vehicle.
2. Part number, description, and the quantity of part(s) desired.

NOTE: Do not order by reference number if a parts catalog is being used; Use the PART NUMBER.

TABLE OF CONTENTS

DESCRIPTION	PAGE
SAFETY AND INSTRUCTION DECALS	1-3
TABLE OF CONTENTS	4
VALVE MOUNTING ASM	5
SEAT SUPPORT ASM	6-7
CONTROL PANEL ASM	8-9
ELECTRICAL SCHEMATIC	10
ELECTRICAL PANEL	11
STEERING GEAR ASM	12
STEERING CONTROL UNIT 92-3502	13
FRONT SUSPENSION ASM	14
FRONT WHEEL ASM	15
FRONT BRAKE ASM (100-8285)	16
PARKING BRAKE ASM	17
BRAKE & ACCELERATOR PEDAL ASM	18
MASTER BRAKE CYLINDER NO. 94-3800	19
HYDRAULIC BRAKE LINE ROUTING ASM	20
HYDRAULIC SCHEMATIC	21
HYDRAULIC PUMP ASM NO. 92-0347	22
REAR BRAKE ASM	23
REAR FENDER	24
REAR AXLE ASM	25
TRANSAXLE INSTALLATION ASM	26
TRANSAXLE CASE ASM	27
TRANSAXLE GEAR SHAFTS ASM	28
COUNTERSHAFT ASM	29
DIFFERENTIAL GEAR ASM	30
SHIFT FORK ASM	31
SHIFT LEVER ASM	32
CLUTCH DRIVE/DRIVEN DETAILS	33
ENGINE MOUNT ASM	34-35
EXHAUST	36
BATTERY MOUNT ASM	37
ENGINE	38-45
THROTTLE LINKAGE ASM	46
FUEL TANK ASM	47
FRESH WATER TANK	48
TANK LID ASM (94-7088)	49
TANK / SADDLE ASM	50-51
SPRAY SYSTEM	52-53
DISTRIBUTION VALVE	54
PRESSURE REGULATOR	55
MAIN ON/OFF	56-57
PUMP 100-8295	58-59
PUMP DRIVE	60
SPRAY SYSTEM ELECTRICAL SCHEMATIC	61
SPRAY BOOM	62-63
TURRET BODIES	64

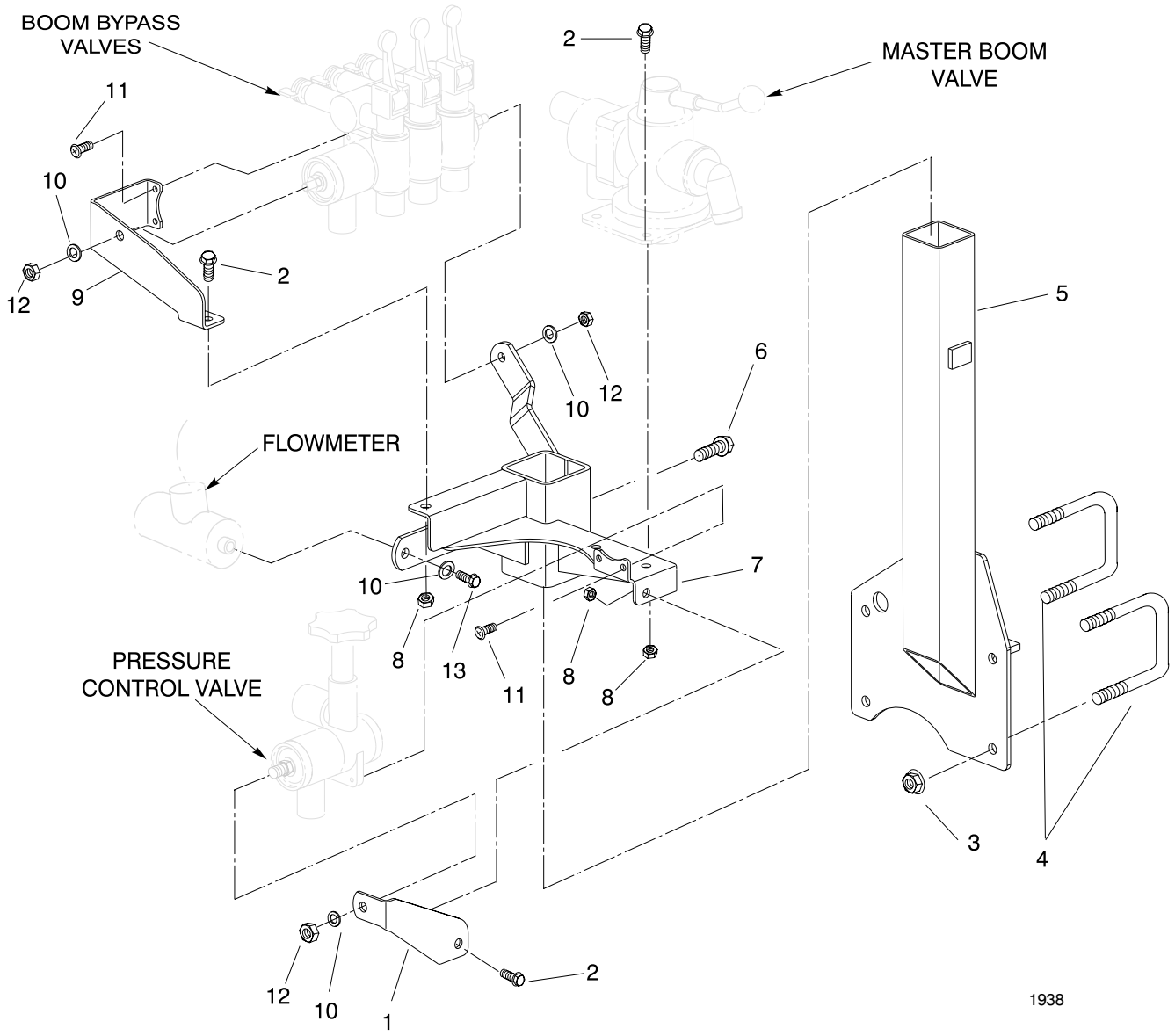

VALVE MOUNTING ASM

#	Part No.	Description	Qty
1	104-8838	Rate Valve Bracket	1
2	3234-5	Flange Screw	4
3	32128-43	Flange Locknut	4
4	100-7067	U-Bolt	2
5	104-8828	Valve Post ASM	1
6	3234-11	Flange Screw	1
7	104-8833	Valve Mount ASM	1

#	Part No.	Description	Qty
8	32128-20	Nut	4
9	104-8839	Section Valve Bracket	1
10	3253-4	Lock Washer	4
11	100-6916	Plastic Screw	4
12	100-6894	Hex Nut	3
13	33114-020	Hex Bolt, M8x20 FT	1

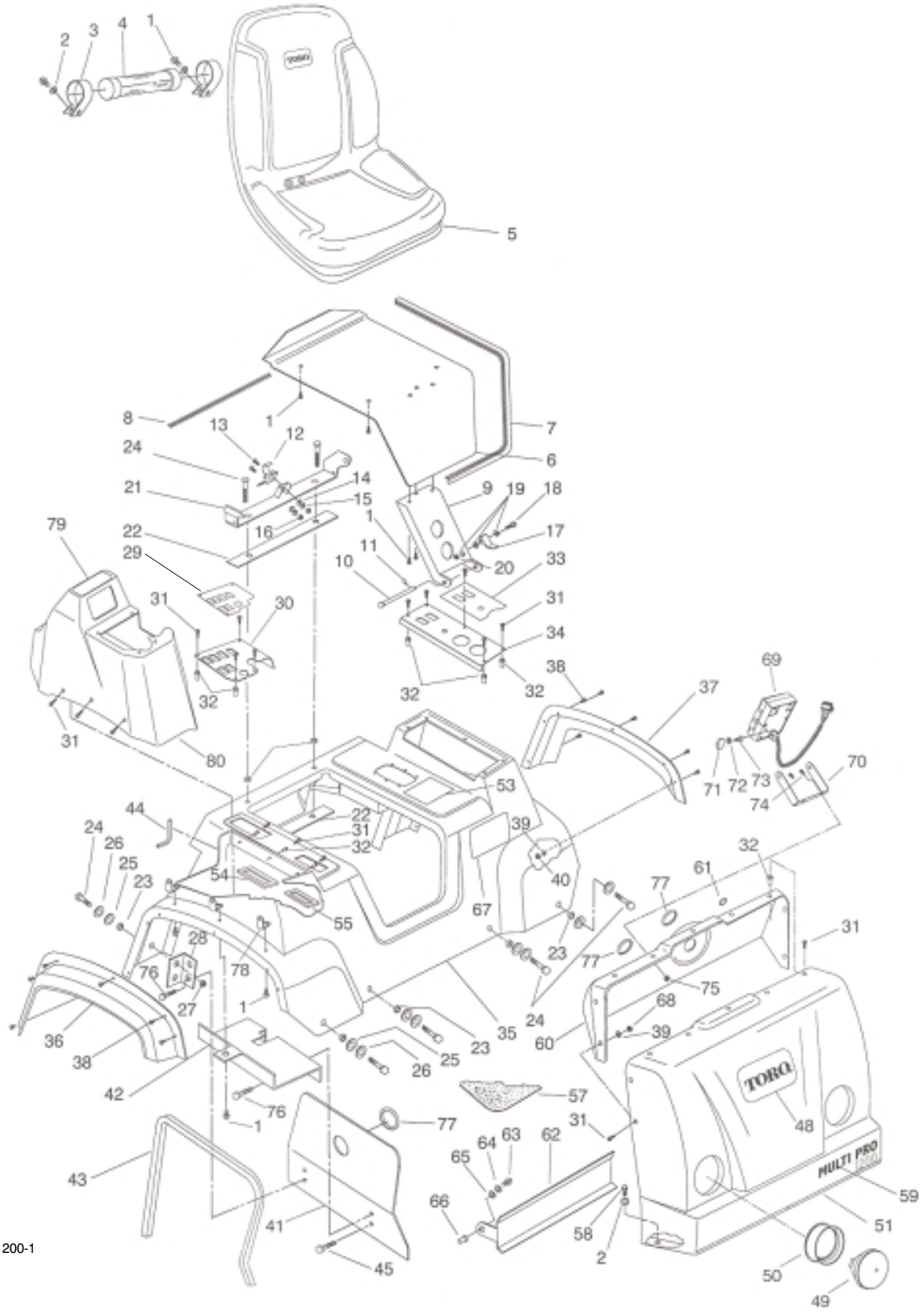

1694-1200-1

ENGINE COVER ASM

#	Part No.	Description	Qty
1	3234-5	Flange Screw	9
2	3256-3	Washer, Flat	7
3	042560	R-Clamp	2
4	042559	Manual Tube	1
5	104-4620	Seat	1
6	100-8495	Seat Mounting Panel	1
7	100-8500	Seat Trim	1
8	100-8499	Foam Seal	1
9	100-8496	Hinge Mount Bracket ASM	1
10	100-8501	Clevis Pin	1
11	328963	Hair Pin	1
12	100-8502	Seat Latch	1
13	3250-4	Machine Screw	2
14	3256-53	Flat Washer	2
15	3253-15	Lock Washer Spring	2
16	3217-25	Hex Nut	2
17	100-8503	Bracket Seat Prop	1
18	322-5	Cap Screw	1
19	3256-23	Washer, Flat	3
20	3296-29	Lock Nut	1
21	100-8459	Seat Belt Bracket ASM	1
22	100-8463	Seal Foam	2
23	100-8464	Seat Box Mount Spacer	8
24	3234-24	Cap Screw	8
25	100-8468	Rubber Washer	6
26	356308	Flat Washer	6
27	32128-43	Flange Nut	2
28	100-8623	Engine Cover Support Bracket	2
29	104-8749	Spray Control Decal	1
30	104-8866	Spray Control Panel	1
31	3290-516	Machine Screw	24
32	100-8450	Well Nut	17
33	100-8470	Vehicle Control Decal	1
34	100-8452	Vehicle Control Panel	1
35	104-8875	Seat Base w/Decals	1
36	94-7074	Fender Flare R.H.	1
37	94-7075	Fender Flare L.H.	1
38	3250-13	Machine Screw	12
39	3256-49	Flat Washer	16
40	3217-26	Hex Nut	12

#	Part No.	Description	Qty
41	104-8848	Shield Panel R.H.	1
42	104-8852	Inner Fender R.H.	1
43	100-8423	Trim, 40" (R.H. & L.H. Panel)	2
44	104-8870	Trim, 9"	1
45	3234-26	Cap Screw	3
* 46	100-8444	Trim, 10.5" (L.H. Panel)	1
* 47	100-8448	Shield Panel L.H.	1
48	62-5550	TORO Decal	1
49	99-7310	Headlight	2
50	99-7311	Headlight Mount	2
51	100-8281	Front Console Hood	1
* 52	87-0430	Start Warning Decal	1
53	100-8454	Range Selector Decal	1
54	100-8436	Foam Seal (Brake Handle Hole)	1
55	100-8437	Foam Seal (Cable Control Hole)	1
* 56	100-8499	Shield Foam (use w/100-8448)	1
57	100-8622	Floor Tread	1
58	3234-17	Cap Screw	5
59	104-8750	Decal "MP1200"	1
60	100-6777	Dash Panel w/Decals	1
61	94-7290	Hole Plug	1
62	100-6731	Headlight Shield	1
63	323-6	Cap Screw	2
64	3253-21	Lock Washer	2
65	3256-4	Flat Washer	2
66	92-3788	Threaded Insert	2
67	100-8620	Service Aid Decal	1
68	3296-21	Nut	4
69	104-8992	Spray Pro Monitor	1
70	99-0576	Mounting Bracket	1
71	99-0667	Knob	2
72	99-0730	Rubber Washer	2
73	3229-1	Carriage Bolt	2
74	3234-4	Cap Screw	2
75	32128-33	Nut	2
76	3234-4	Cap Screw	5
77	040764	Grommet	5
78	104-8854	L-Bracket	3
79	104-8882	Decal	1
80	104-8867	Console w/Decal	1

*Not Illustrated

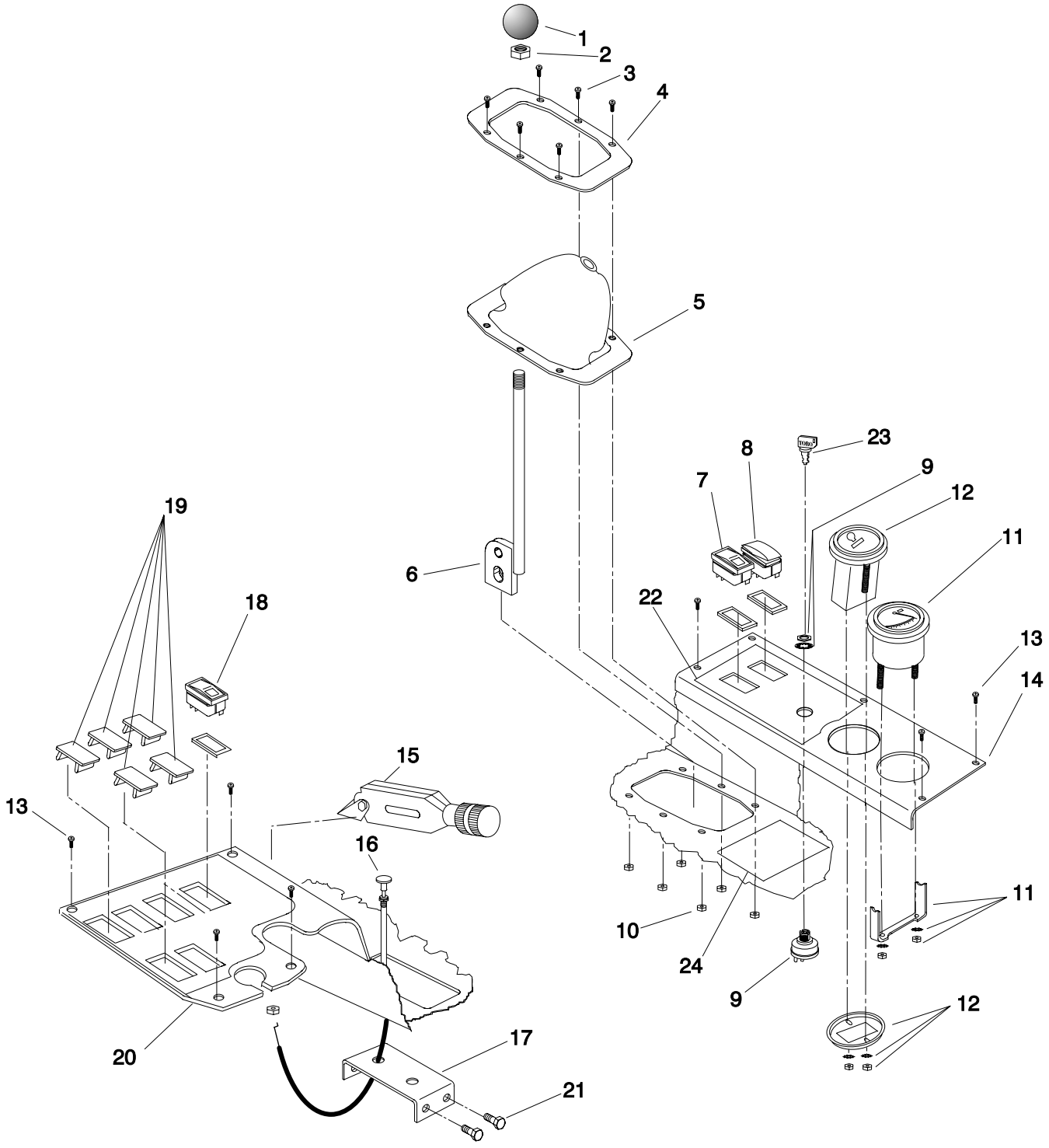

1697-1200-1

CONTROL PANEL ASM

#	Part No.	Description	Qty
1	87-6720	Shift Knob	1
2	3218-18	Hex Jam Nut	1
3	3250-13	Screw PPH	6
4	87-3760	Shift Boot Plate	1
5	87-8620	Shift Boot ASM	1
6	87-2040	Shift Lever	1
7	104-9007	Accelerator Switch	1
8	100-8469	Headlight Switch	1
9	83-0020	Ignition Switch	1
10	3296-2	Lock Nut	6
11	42610	Voltage Gauge	1
12	66-2950	Hour Meter	1

#	Part No.	Description	Qty
13	3290-516	Machine Screw	10
14	100-8452	Vehicle Control Panel w/Decal	1
15	87-2710	Emegency Brake Lever	1
16	41697	Choke Cable ASM	1
17	100-8385	Throttle Speed Bracket	1
18	104-9007	Pump Switch	1
19	99-7420	Plug	5
20	104-8866	Spray Control Panel w/Decal	1
21	3234-4	Hex Bolt	4
22	100-8470	Vehicle Control Decal	1
23	63-8360	Ignition Key	1
24	100-8454	Range Selector Decal	1

NOTES:

ELECTRICAL SCHEMATIC

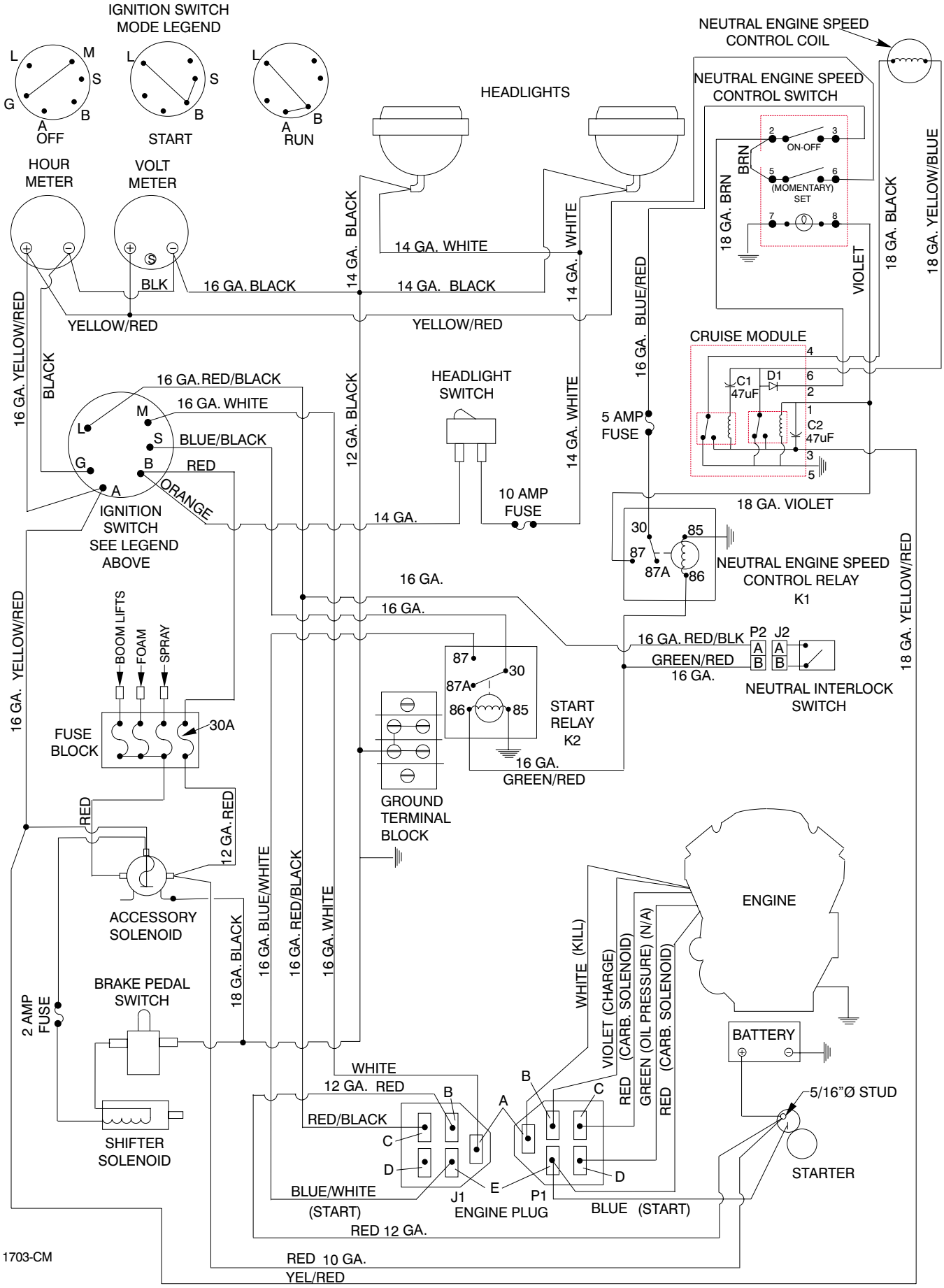

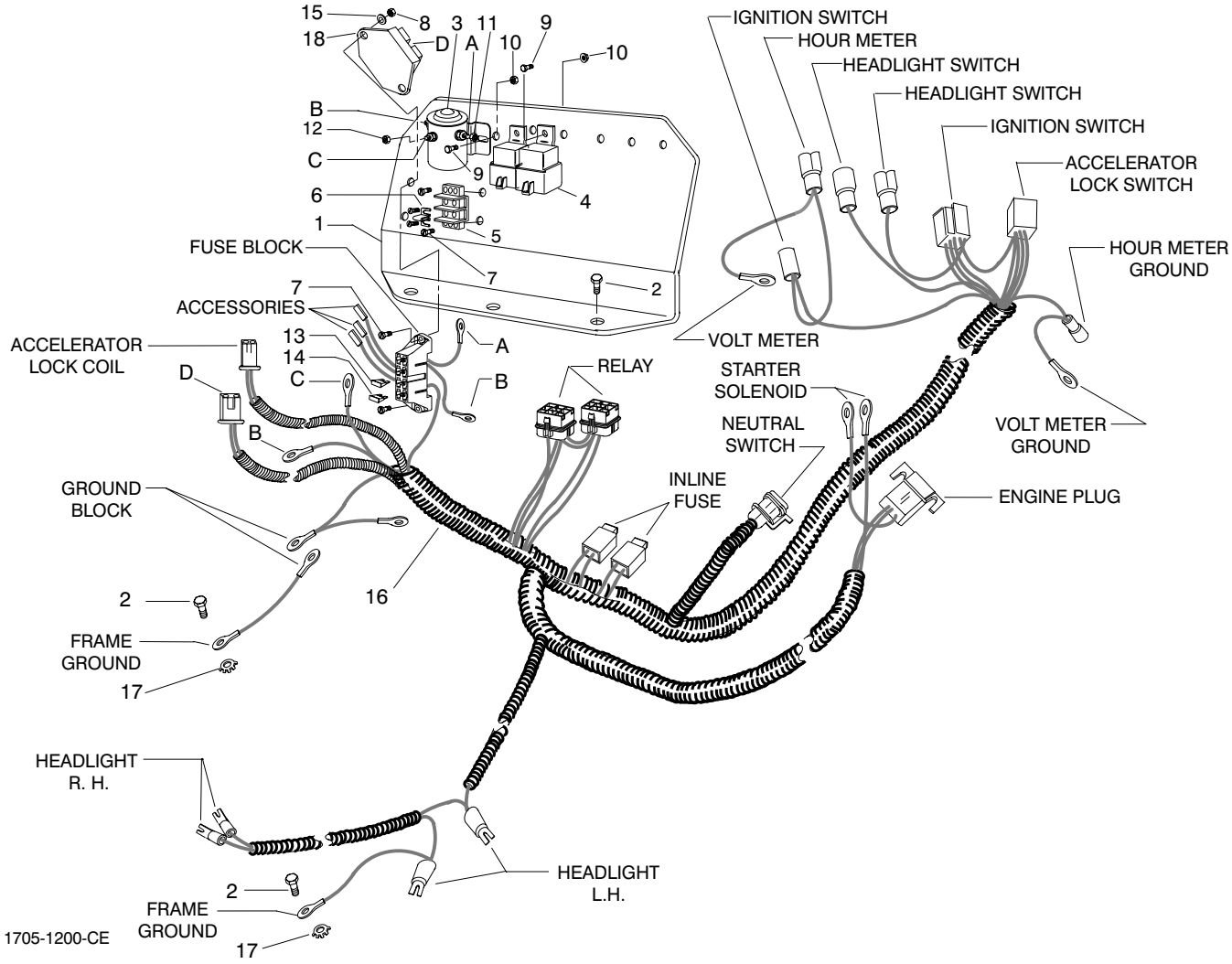

ELECTRICAL PANEL

#	Part No.	Description	Qty
1	100-8441	Panel	1
2	3234-5	HH Screw	5
3	94-7079	Solenoid	1
4	70-1480	Relay	2
5	42862	Ground Terminal Block	1
6	42863	Jumper Strip	1
7	32105-13	HH Screw	4
8	3217-26	Hex Nut	4
9	321-3	HH Screw	4
10	32128-33	Flange Nut	4

#	Part No.	Description	Qty
11	3219-2	Hex Nut	2
12	3219-14	Hex Nut	1
13	95-2438	Fuse - 10 AMP	1
14	42765	Fuse - 30 AMP	1
15	3253-17	Spring Washer	4
16	104-8872	Wire Harness (Main Vehicle)	1
17	3255-8	External Tooth Lock Washer	2
18	99-3703	Cruise Module	1
*	92-0034	Terminal Boot	3
*	104-8936	Wire Harness (Spray System)	1
*	99-0734	Fuse- 2 AMP (Shift Lever)	1

*Not Illustrated

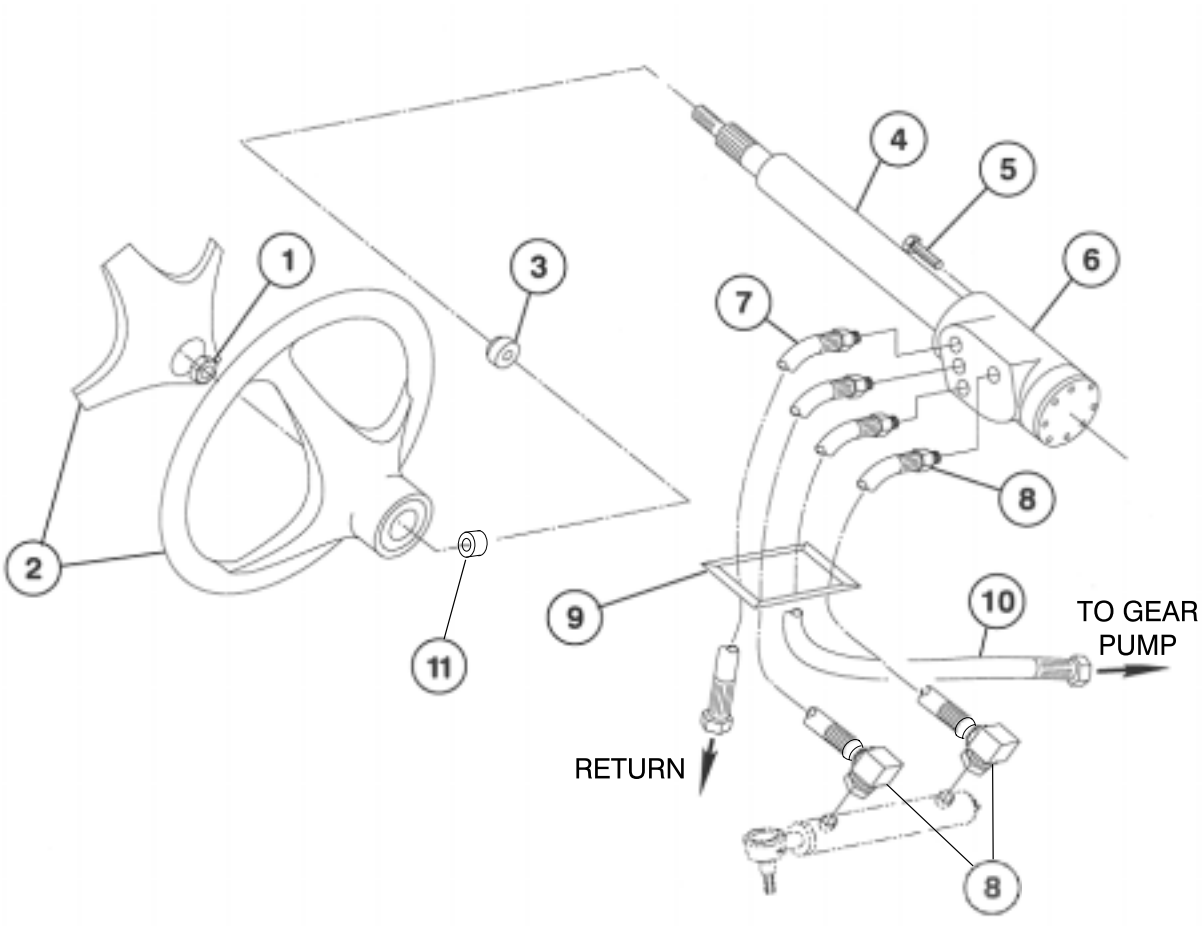

STEERING GEAR ASM

#	Part No.	Description	Qty
1	92-3513	Nut	1
2	94-3500	Steering Wheel ASM	1
	93-5212	Steering Wheel	1
	88-3870	Steering Wheel Insert	1
3	93-5439	Seal- Steering	1
4	94-8792	Steering Column	1
5	48-7620	Cap Screw- Metric	4
6	92-3502	Steering Control Unit	1
*	92-3849	Seal Kit (Steering Control Unit)	AR

#	Part No.	Description	Qty
7	100-8253	Hose ASM- Steer Valve/Filter	1
		O-Ring (f/w 100-8253)	1
8	100-8252	Hose ASM- Steer Valve/Cylinder	2
		O-Ring (f/w 100-8252)	1
9	100-8552	Floor Trim	1
10	100-8251	Hose ASM- Gear Pump/Steering Valve	1
		O-Ring (f/w 100-8251)	1
*	94-8607	Hose Cover	1
11	21-9260	Dust Cover	1

*Not Illustrated

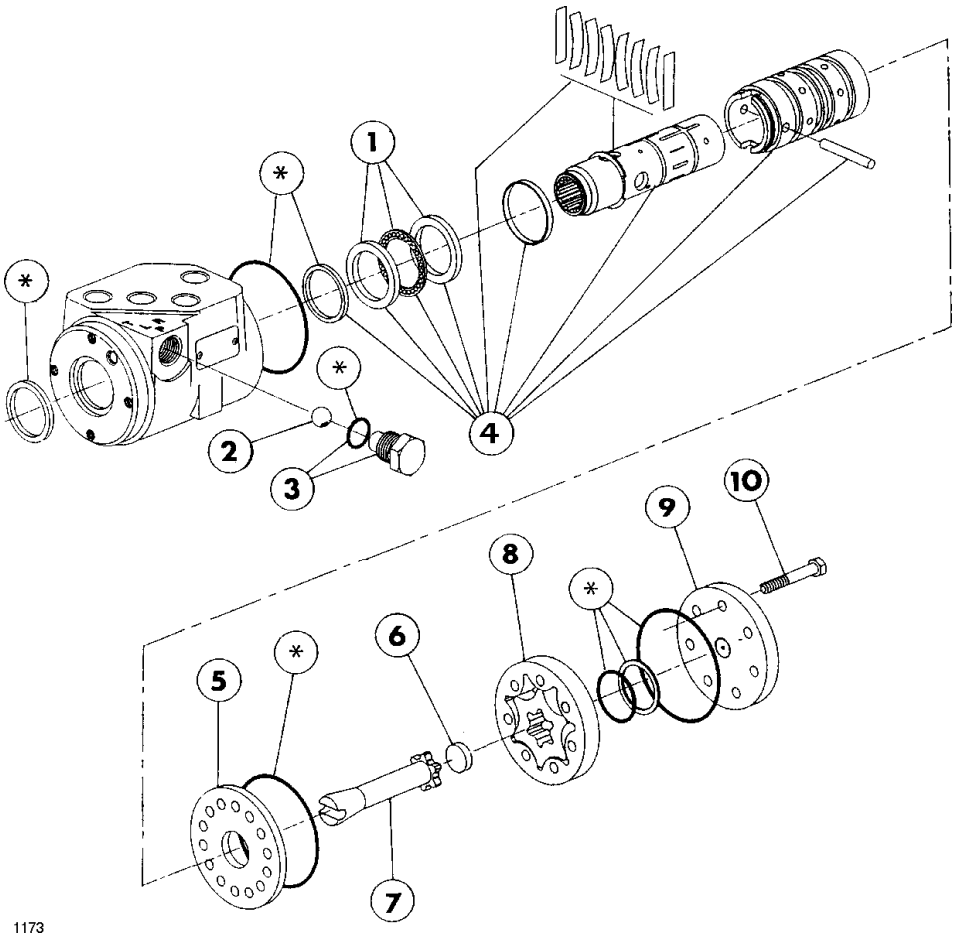

1173

STEERING CONTROL UNIT 92-3502

#	Part No.	Description	Qty
1	92-3839	Bearing Kit (f/w 92-3840)	1
2	92-3842	Check Ball	1
3	92-3841	Plug/O-Ring	1
4	92-3840	Control Parts Assembly	1
5	92-3843	Wear Plate	1
6	92-3845	Spacer	1

#	Part No.	Description	Qty
7	92-3844	Drive	1
8	92-3846	Gerotor	1
9	92-3847	End Cap	1
10	92-3848	Cap Screw	7
*	92-3849	Seal Kit - Includes all parts indicated by * (see illustration)	AR

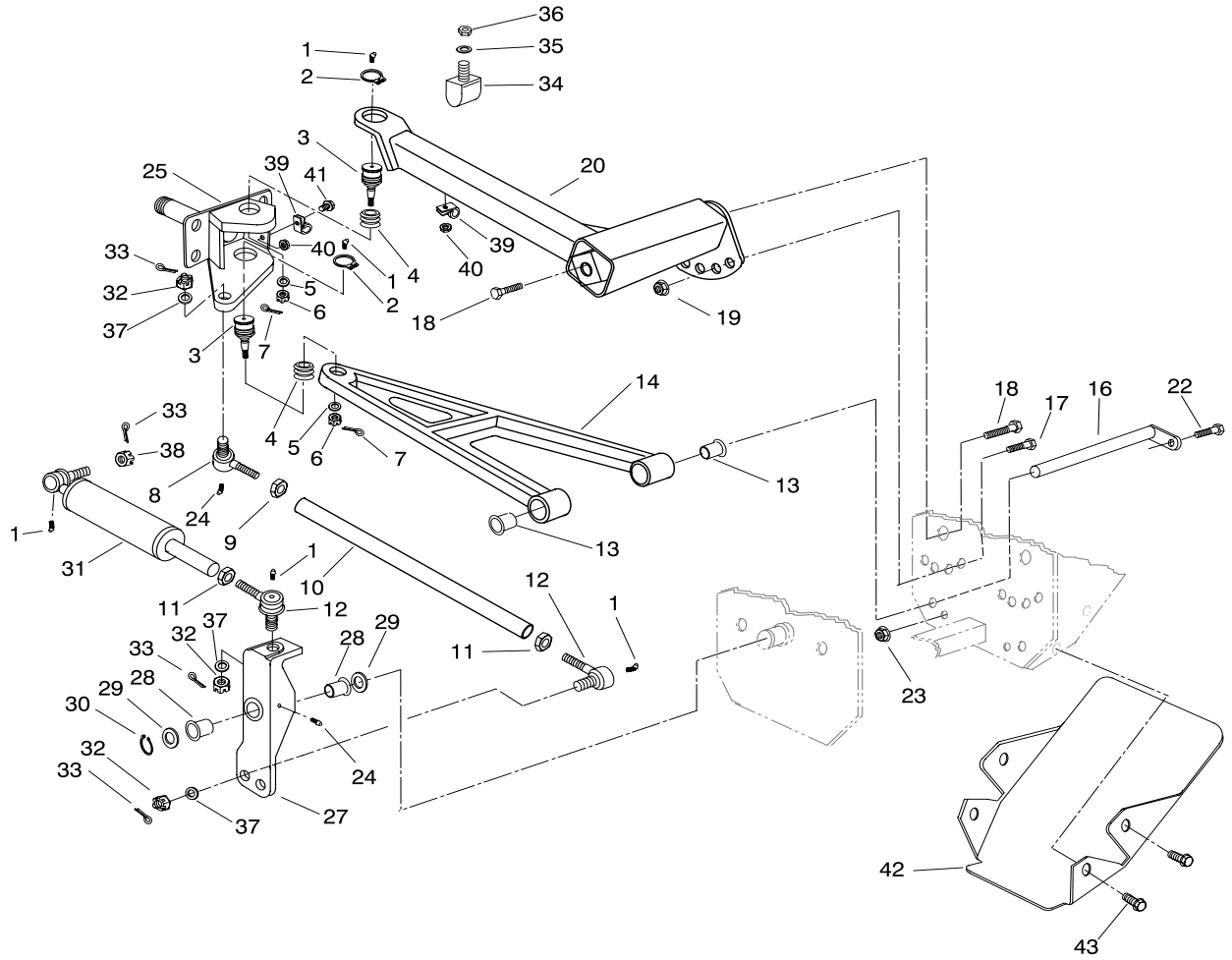

1746

FRONT SUSPENSION ASM

#	Part No.	Description	Qty
1	302-60	Grease Fitting 90°	7
2	32151-104	Snap Ring	4
3	87-1430	Ball Joint	4
4	87-2420	Joint Seal	4
5	3256-27	Flat Washer	4
6	32136-2	Castle Nut	4
7	3272-17	Cotter Pin	4
8	112771	Tie Rod End L.H.	2
9	3-8386	Hex Nut L.H.	2
10	100-8534	Tie Rod	2
11	3220-11	Hex Nut R.H.	3
12	112772	Tie Rod End R.H.	3
13	100-8541	Bushing	4
14	100-6745	A-Arm L.H.	1
* 15	100-6744	A-Arm R.H.	1
16	100-8544	Pivot Pin ASM	2
17	327-4	Hex Bolt	2
18	328-24	Hex Bolt	4
19	32128-50	Nut	2
20	100-8535	Torsion Arm L.H.	1
* 21	100-8536	Torsion Arm R.H.	1
22	3234-4	Cap Screw	2

#	Part No.	Description	Qty
23	32128-33	Lock Nut	2
24	302-5	Grease Fitting ST	4
25	100-6739	Spindle L.H.	1
* 26	100-6738	Spindle R.H.	1
27	100-6774	Steering Pivot	1
28	256-318	Bushing	2
29	3-6781	Washer	2
30	100-6785	Snap Ring	1
31	100-8278	Steering Cylinder	1
32	915031	Hex Slotted Nut	5
33	3272-6	Cotter Pin	6
34	87-3470	Bumper	2
35	3253-6	Lock Washer	2
36	93-6166	Nut	2
37	3256-25	Washer	5
38	32136-13	Hex Slotted Nut	1
*	100-6728	Seal Kit (Hyd. Cylinder)	AR
39	2412-134	R-Clamp (for Front Brake Hose)	4
40	32128-33	Nut	4
41	321-6	Cap Screw	2
42	100-7060	Skid Plate	1
43	3234-5	Flange Bolt	4

*Not Illustrated

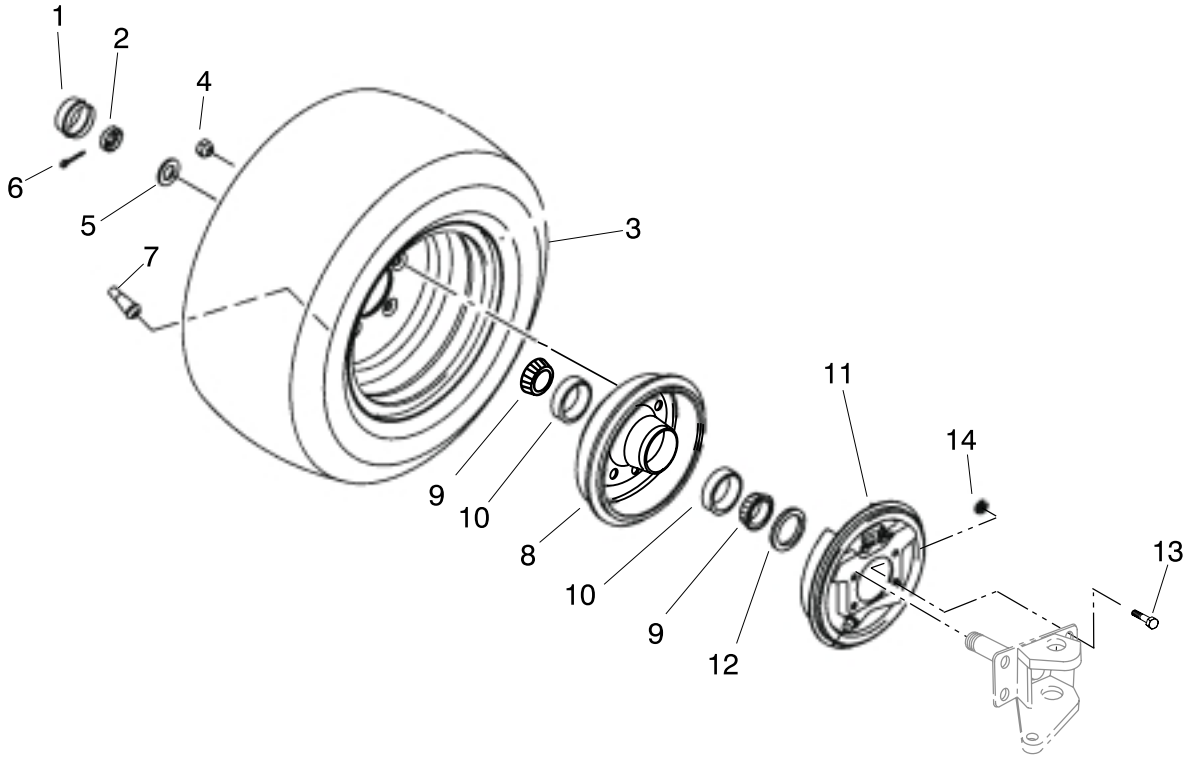

1701

FRONT WHEEL ASM

#	Part No.	Description	Qty
1	241-119	Dust Cap	2
2	32136-11	Spindle Nut	2
3	93-6487	Front Tire/Wheel ASM	2
	404683	Front Wheel Rim	2
	93-6486	Tire	2
4	321077	Lug Nut	10
5	27-1850	Spindle Washer	2
6	3272-18	Cotter Pin	2

#	Part No.	Description	Qty
7	232-27	Stem	2
8	100-8287	Front Hub Drum	2
9	100-6729	Bearing Cone	4
10	254-72	Bearing Cup	4
11	100-8285	Front Brake ASM	2
12	253-129	Seal	2
13	86-8610	Cap Screw	8
14	32128-28	Lock Nut	8

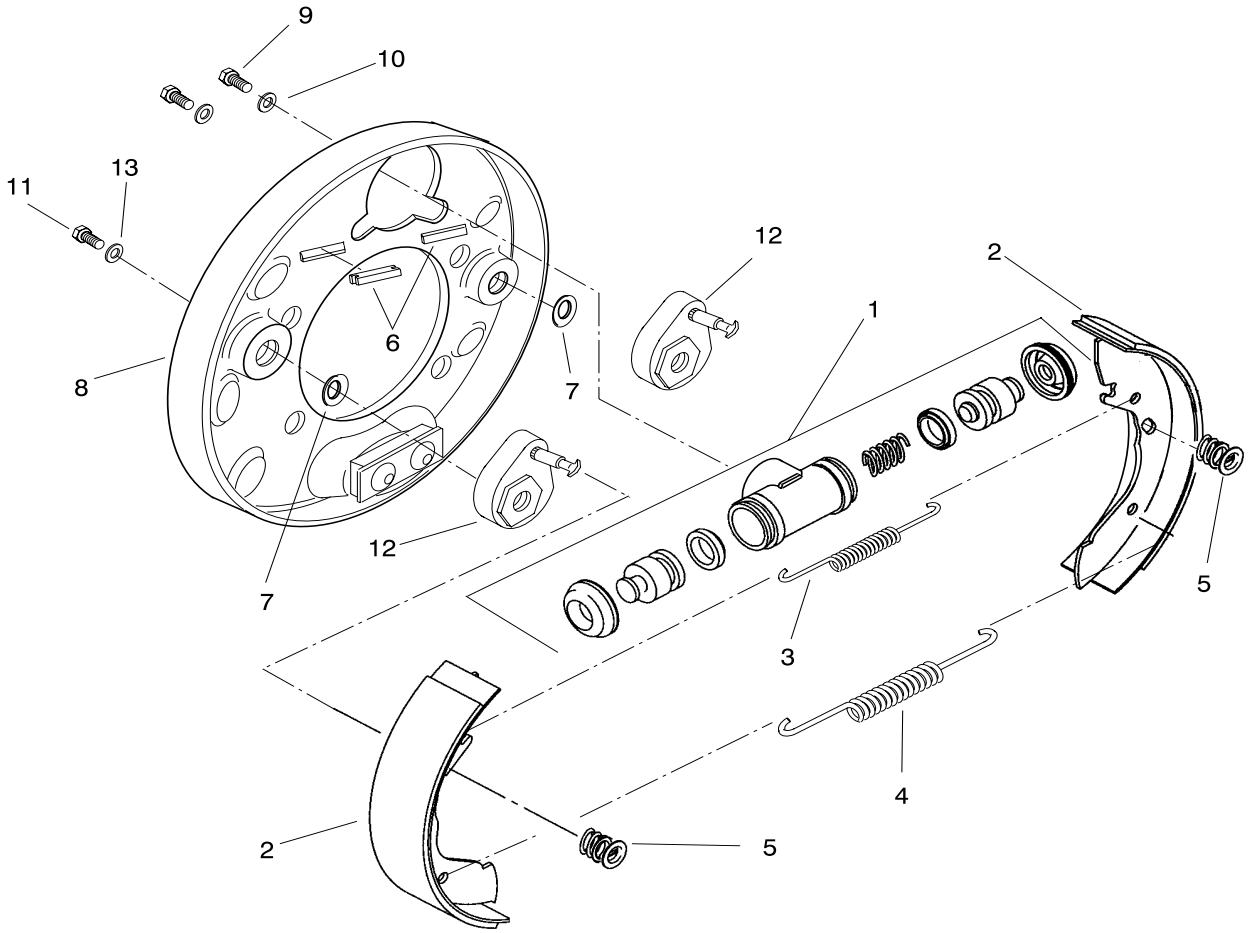

1702

FRONT BRAKE ASM (100-8285)

#	Part No.	Description	Qty
1	100-8580	Wheel Cylinder ASM	1
2	100-8587	Shoe Set (4 Shoes)	1
3	100-8581	Upper Spring	1
4	100-8582	Lower Spring	1
5	100-8583	Shoe Hold Down Spring ASM	2
6	100-8584	Dust Cover	2
7	100-8585	Bellville Washer	2

#	Part No.	Description	Qty
8	100-8586	Backing Plate	1
9	33103-012	Bolt	2
10	3253-3	Spring Lock Washer	2
11	329-2	Bolt	2
12	100-8588	Adjuster Lever ASM	2
13	3256-1	Washer	2

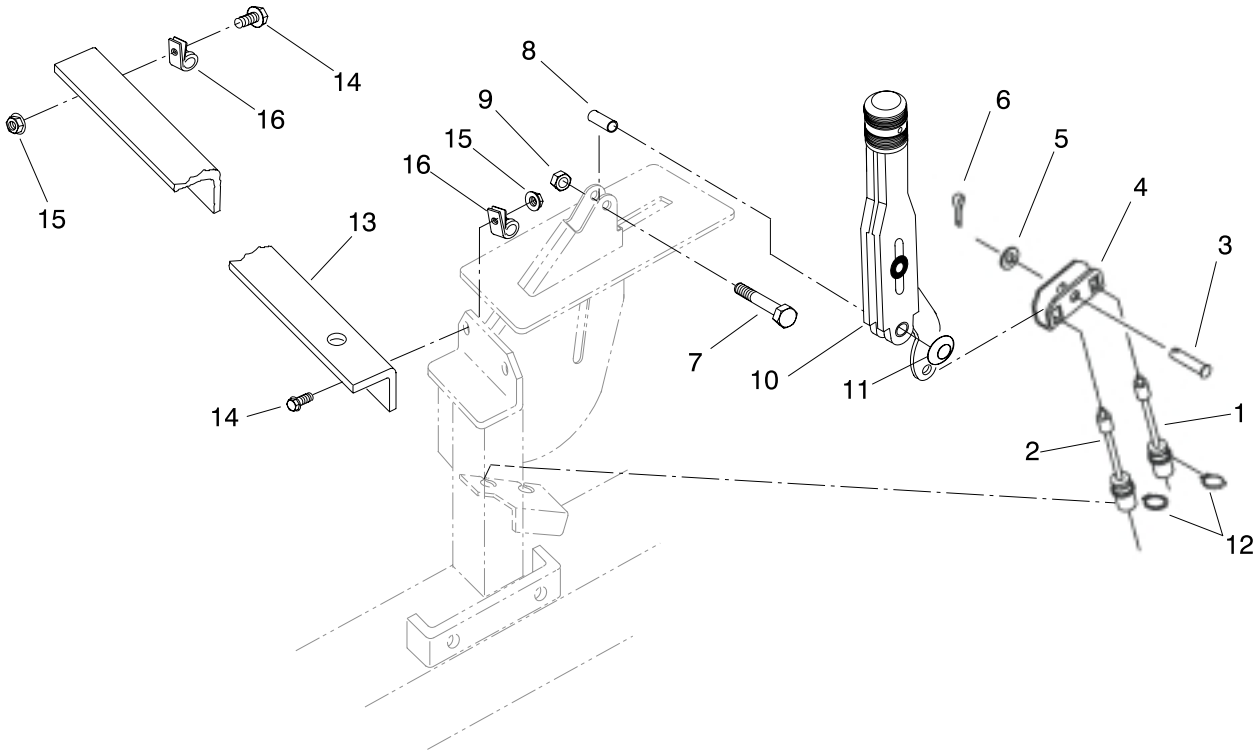

1691

PARKING BRAKE ASM

#	Part No.	Description	Qty
1	87-8240	Parking Brake Cable LH	1
2	100-8261	Parking Brake Cable RH	1
3	94-3829	Clevis Pin	1
4	87-3480	Brake Equalizer Plate	1
5	3256-23	Flat Washer	2
6	3272-6	Cotter Pin	1
7	321-9	HH Screw	1
8	87-4710	Parking Brake Spacer	1

#	Part No.	Description	Qty
9	3296-42	Lock Nut	1
10	87-2710	Parking Brake Lever	1
11	3290-477	Curved Washer	1
12	32120-47	Retaining Ring	2
13	100-8532	Seat Box Angle ASM	1
14	3234-11	Cap Screw - Flange	2
15	32128-21	Locknut - Flange	2
16	2412-81	R-Clamp (Battery Cable)	2

* Not Illustrated

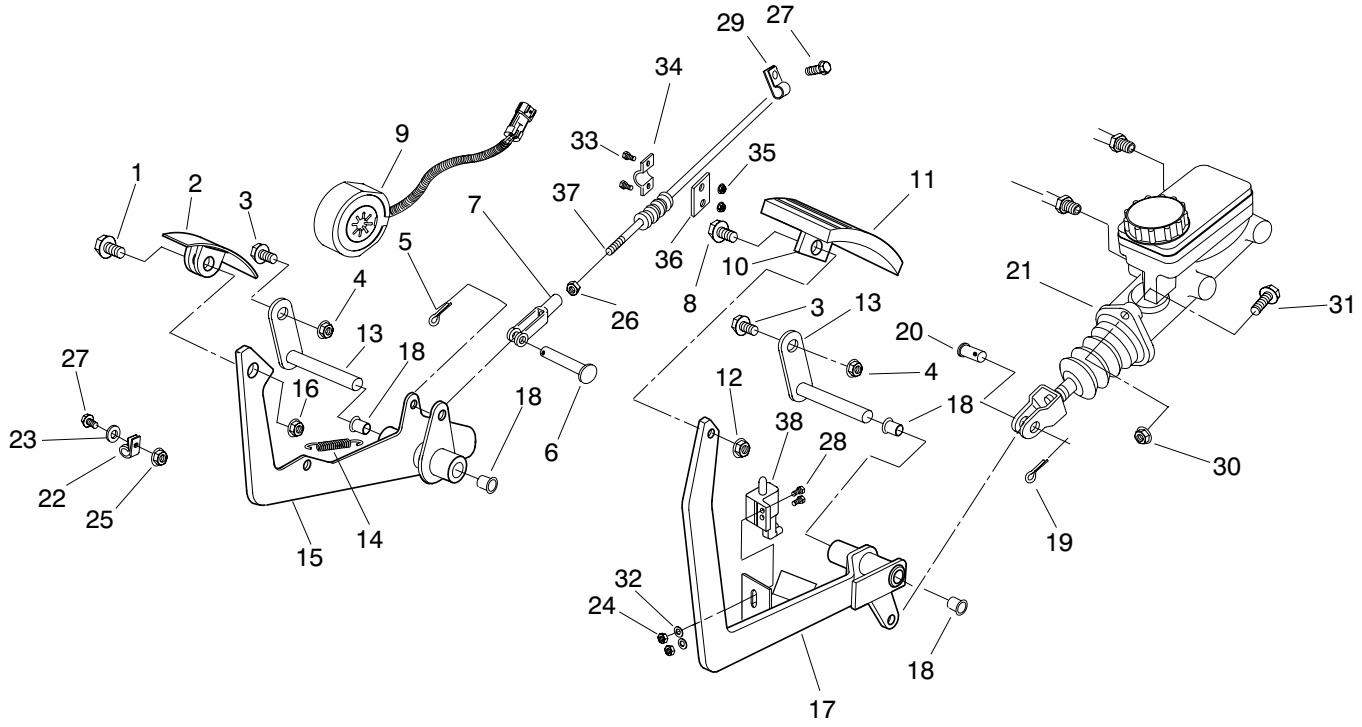

1693-1200

BRAKE & ACCELERATOR PEDAL ASM

#	Part No.	Description	Qty
1	322-5	Bolt	1
2	93-8469	Accelerator Pedal	1
3	3234-5	Cap Screw	3
4	32128-20	Nut	2
5	3272-1	Cotter Pin	1
6	283-66	Clevis Pin	1
7	282-28	Clevis	1
8	3234-11	Cap Screw	1
9	99-8090	Magnet Lock	1
10	100-8422	Brake Pedal	1
11	7-3900	Pedal Pad	1
12	32128-21	Nut	1
13	100-8554	Pivot Pin	2
14	67-1450	Spring	1
15	100-8367	Accelerator Lever	1
16	32153-3	Nut	2
17	100-8553	Brake Lever	1
18	256-257	Bushing	4
19	3272-10	Cotter Pin	1
20	283-2	Clevis Pin	1

#	Part No.	Description	Qty
21	94-3800	Master Cylinder ASM	1
22	2412-134	R-Clamp	1
23	3256-22	Flat Washer	2
24	3217-26	Nut	2
25	32128-33	Nut	1
26	3219-14	Nut	1
27	3234-4	Capscrew	2
28	3290-134	Screw	2
29	2412-134	R-Clamp	2
30	32128-43	Nut	2
31	3234-11	Bolt	2
32	3253-17	Lock Washer	2
33	3274-81	Socket Head Screw	2
34	100-8560	Throttle Cable Bracket	2
35	3217-26	Hex Nut	2
36	100-8561	Spacer	1
37	100-8383	Accelerator Cable	1
38	92-0305	Switch - Limit	1
* 39	104-8791	Pedal Stop	1
* 40	100-6702	Stop Pedal Rubber	2

* Not Illustrated

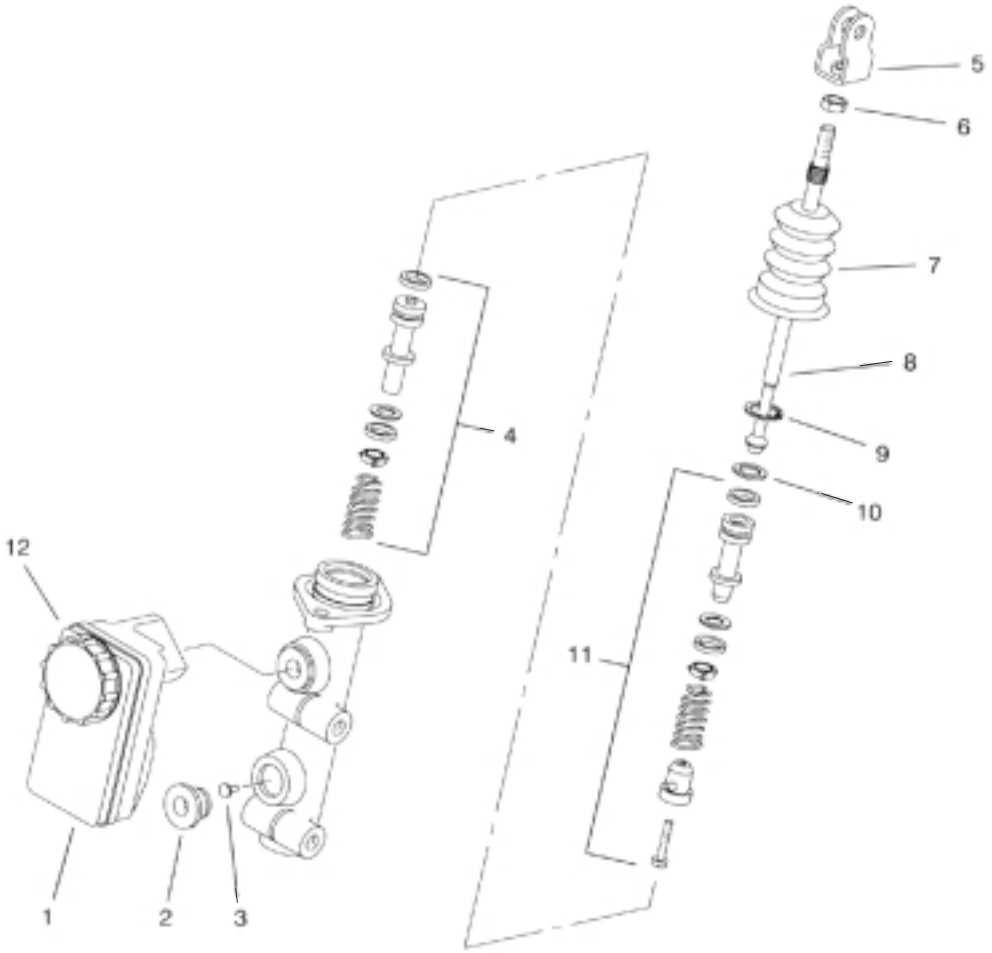

1675

MASTER BRAKE CYLINDER NO. 94-3800

#	Part No.	Description	Qty
1	87-3040	Reservoir- Master Cylinder (Incl. Ref. # 12)	1
2	93-8971	Seal- Port, Flange	2
3	92-4103	Pin- Stop	1
4	92-4102	Secondary Piston ASM	1
5	92-4110	Clevis	1
6	21-0360	Hex Nut	1

#	Part No.	Description	Qty
7	94-5209	Dust Cover	1
8	94-5210	Push Rod	1
9	92-4109	Circlip	1
10	92-4108	Retainer Washer	1
11	92-4101	Primary Piston ASM	1
12	92-4112	Cap ASM	1

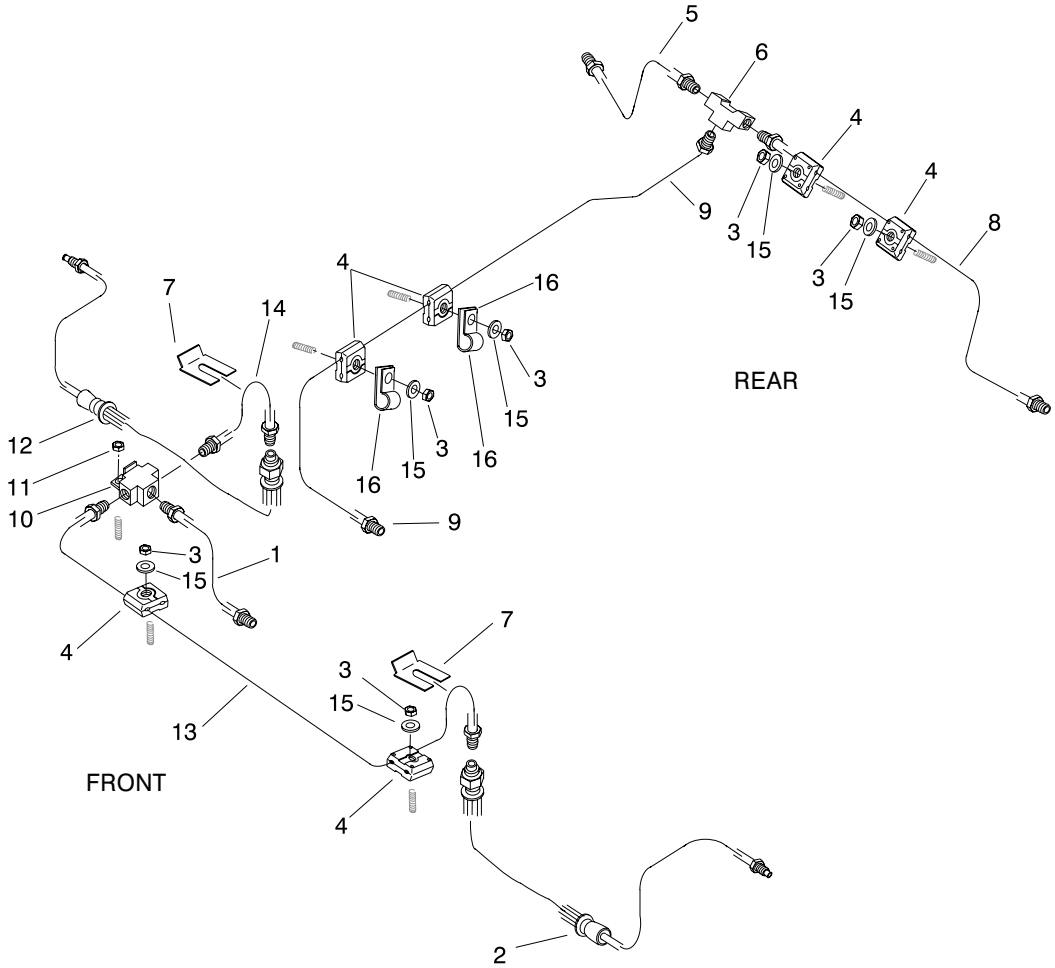

1692

HYDRAULIC BRAKE LINE ROUTING ASM

#	Part No.	Description	Qty
1	100-8506	Brake Tube, Front Supply	1
2	100-8467	Brake Hose, Front L.H.	1
3	3296-42	Lock Nut	6
4	87-7660	Brake Line Clamp Half	12
5	100-8510	Brake Tube Rear R.H.	1
6	098346	Brake Line Tee	1
7	87-3580	Brake Hose Retainer	2
8	100-8511	Brake Tube Rear L.H.	1

#	Part No.	Description	Qty
9	100-8509	Brake Tube, Rear Supply	1
10	87-3560	Brake Line Tee	1
11	32128-33	Lock Nut	1
12	100-8420	Brake Hose Front R.H.	1
13	100-8507	Brake Tube Front L.H.	1
14	100-8508	Brake Tube Front R.H.	1
15	3256-22	Washer	6
16	2412-82	R-Clamp (Positive Cable & Emergency Brake Cable)	2

HYDRAULIC SCHEMATIC

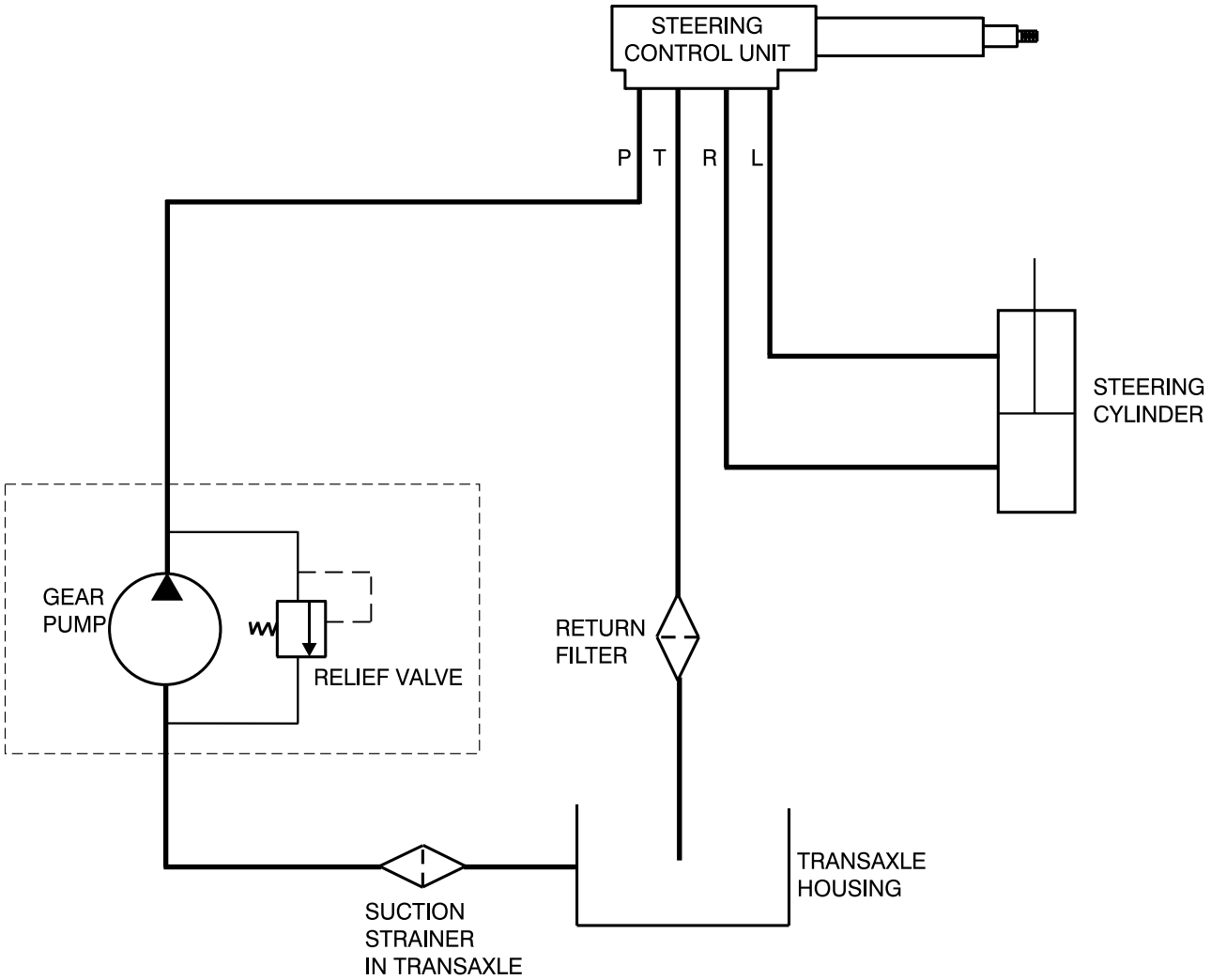

T = TANK
L= WORKING PRESSURE
R= WORKING PRESSURE
P= PRESSURE

1698

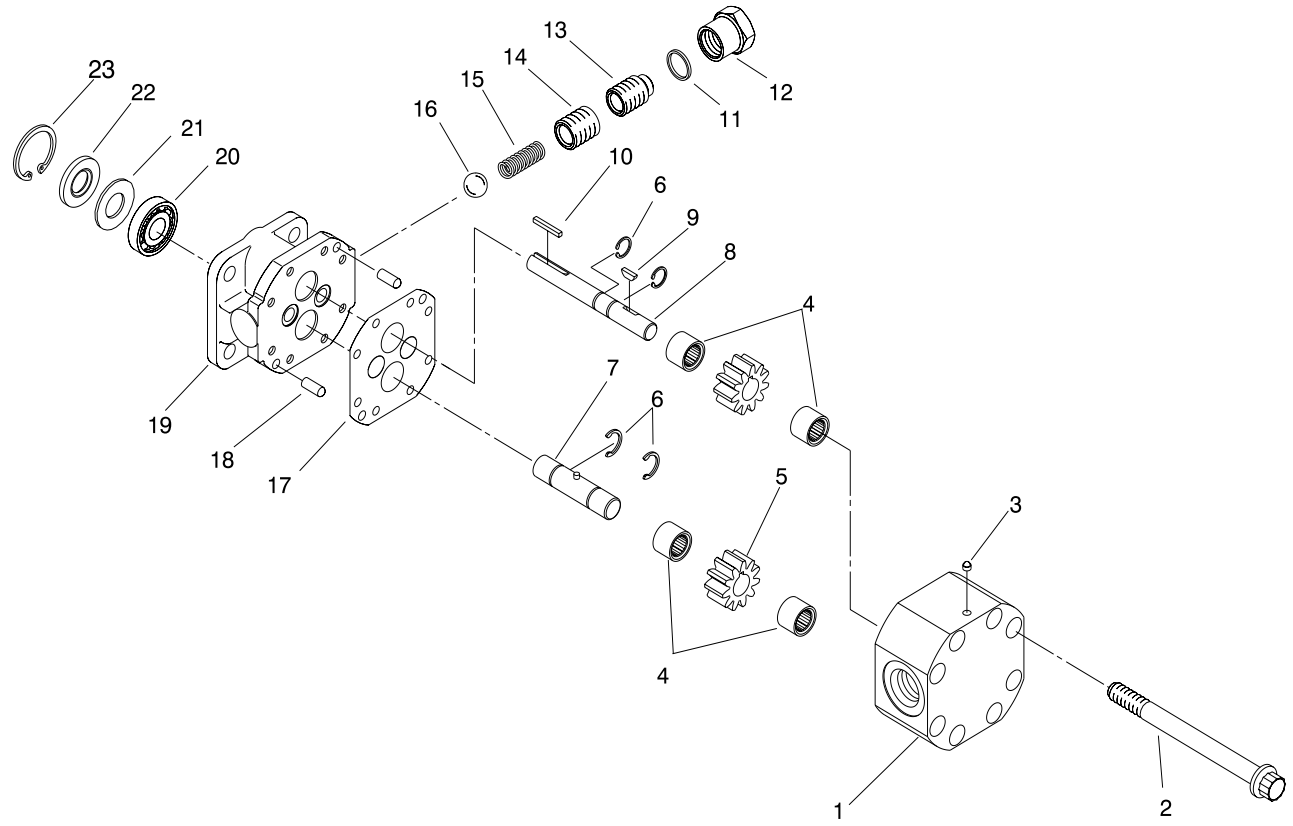

1716

HYDRAULIC PUMP ASM NO. 100-8302

#	Part No.	Description	Qty
1	**	Gear Housing	1
2	100-8268	Screw	8
3	100-8269	Plug BETA	1
4	**	Needle Bearing	4
5	**	Gear	2
6	92-3961	Crescent Ring	4
7	**	Idler Shaft	1
8	**	Drive Shaft	1
9	100-8270	W. Key	1
10	92-3876	Key	1
11	100-8274	Gasket	1
12	100-8271	Hex Cap	1
13	100-8272	Screw Adj.	1

#	Part No.	Description	Qty
14	92-3870	Spring CS, 0.28	1
15	92-3871	Spring	1
16	100-8273	Steel Ball	2
17	92-3880	Gasket, Amber (.00100 Thk)	1
	92-3881	Gasket, Silver (.00050 Thk)	1
	92-3882	Gasket, Gold (.00075 Thk)	1
18	100-8265	Shear Pin	1
19	**	Stator	1
20	92-3874	Ball Bearing	1
21	92-3960	Spacer	1
22	100-8275	Seal S.B. .005	1
23	92-3873	Snap Ring	1

** Parts not Serviceable.

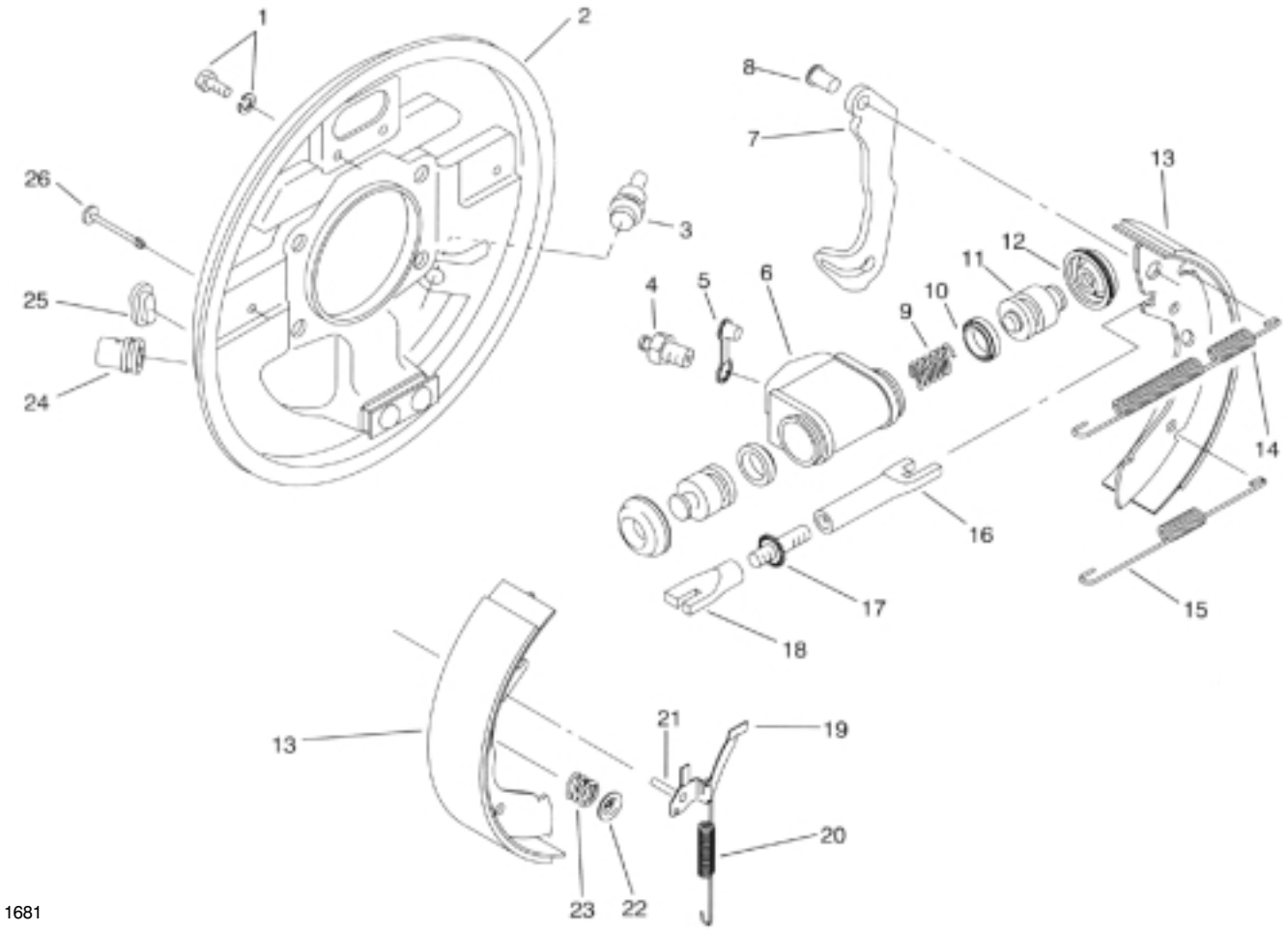

REAR BRAKE ASM

#	Part No.	Description	Qty
1	92-4135	Set Bolt	2
2	92-4136	Backplate Asm, LH (Incl. Ref # 24)	1
*	92-4100	Backplate Asm, RH (Incl. Ref. #24)	1
3	92-4146	Plug	1
4	92-4137	Bleed Screw	1
5	92-4114	Bleed Screw Cap	1
6	†	Body	1
7	†	Operating Lever LH/RH	1
8	†	Pin	2
9	†	Spring	2
10	†	Seal- 'L' Type	2
11	†	Piston	2
12	†	Dust Cover	1
13	92-4143	Shoe & Lining Set (4 shoes) (Incl. Ref. #7 & 8)	1 1
14	92-4147	Shoe Spring, Upper LH	1
*	92-4148	Shoe Spring, Upper RH	1
15	92-4149	Shoe Spring, Lower	1
16	†	Female Pushrod LH	1
*		Female Pushrod RH	1
17	†	Adjuster Bolt	1
18	†	Adjuster Sleeve	1

#	Part No.	Description	Qty
19	92-4123	Pawl Asm, LH (Incl. Ref. # 21)	1
*	92-4124	Pawl Asm, RH (Incl. Ref. # 21)	1 1
20	92-4150	Adjuster Spring, LH	1
*	92-4151	Adjuster Spring, RH	1
21	†	Pawl Pin	2
22	92-4131	Hold Down Washer	2
23	92-4152	Hold Down Spring	1
24	†	Pipe Guide	1
25	92-4134	Inspection Plug	2
26	92-4133	Hold Down Pin	2
*	92-4144	Adjuster Asm, LH (Incl. Ref. #16-18)	1
*	92-4145	Adjuster Asm, RH (Incl. Ref. #16-18)	1
*	92-4140	Wheel Cylinder Asm, LH (Incl. Ref. #4-6 & 9-12)	1
*	92-4141	Wheel Cylinder Asm, RH (Incl. Ref. #4-6 & 9-12)	1
*	92-4142	Seal Kit (Incl. Ref. #10 & 12)	1
*	93-7125	Rear Brake Asm, RH (Complete)	1
*	93-7126	Rear Brake, LH (Complete)	1

† Not Serviced Separately

*Not Illustrated

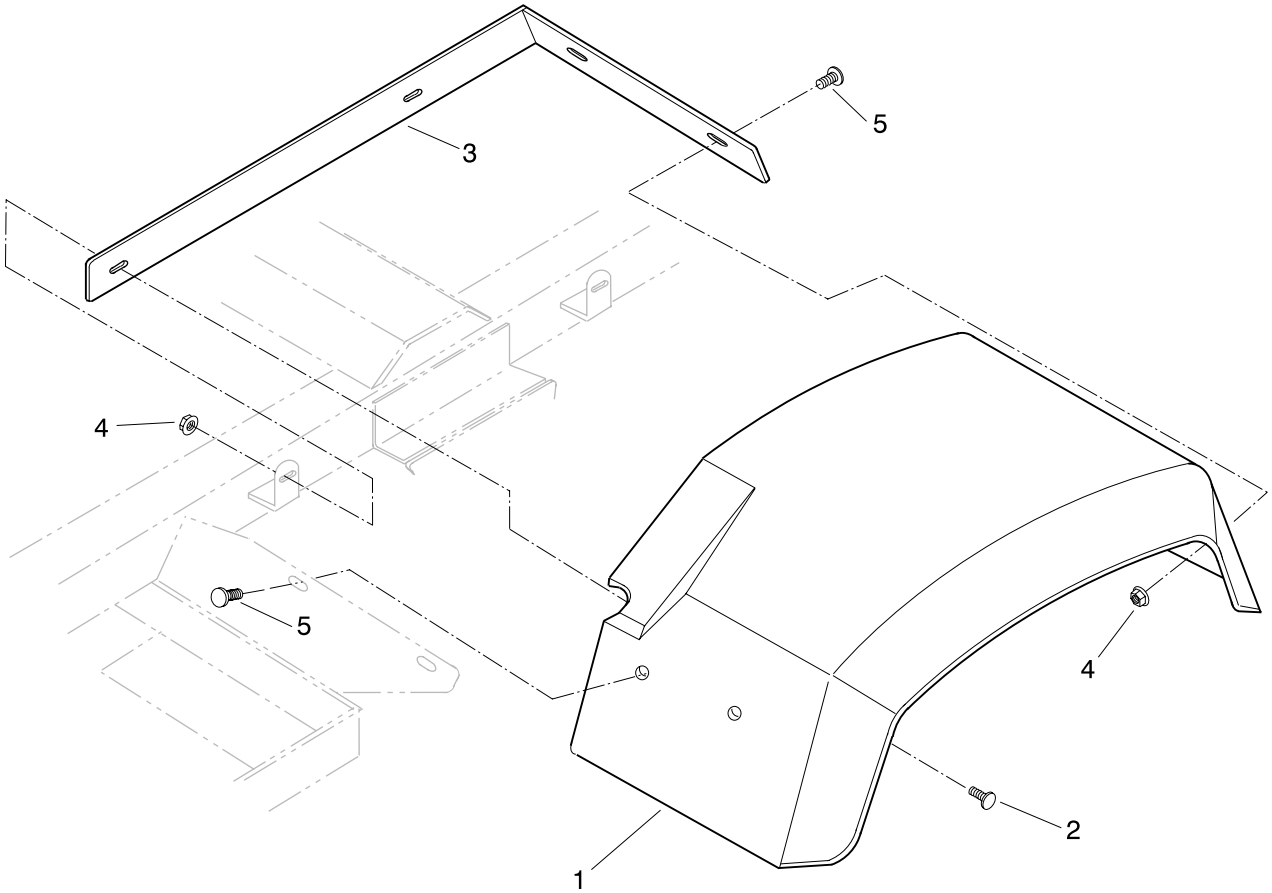

1690

REAR FENDER

#	Part No.	Description	Qty
1	93-6498	24" Rear Fender	2
2	3230-2	CRG Bolt	4
3	100-8245	Fender Bracket LH	1
4	32128-20	Flange Nut	12

#	Part No.	Description	Qty
5	3230-1	CRG Bolt	8
*	100-8246	Fender Bracket RH	1
*	100-8259	Splash Guard	2

*Not Illustrated

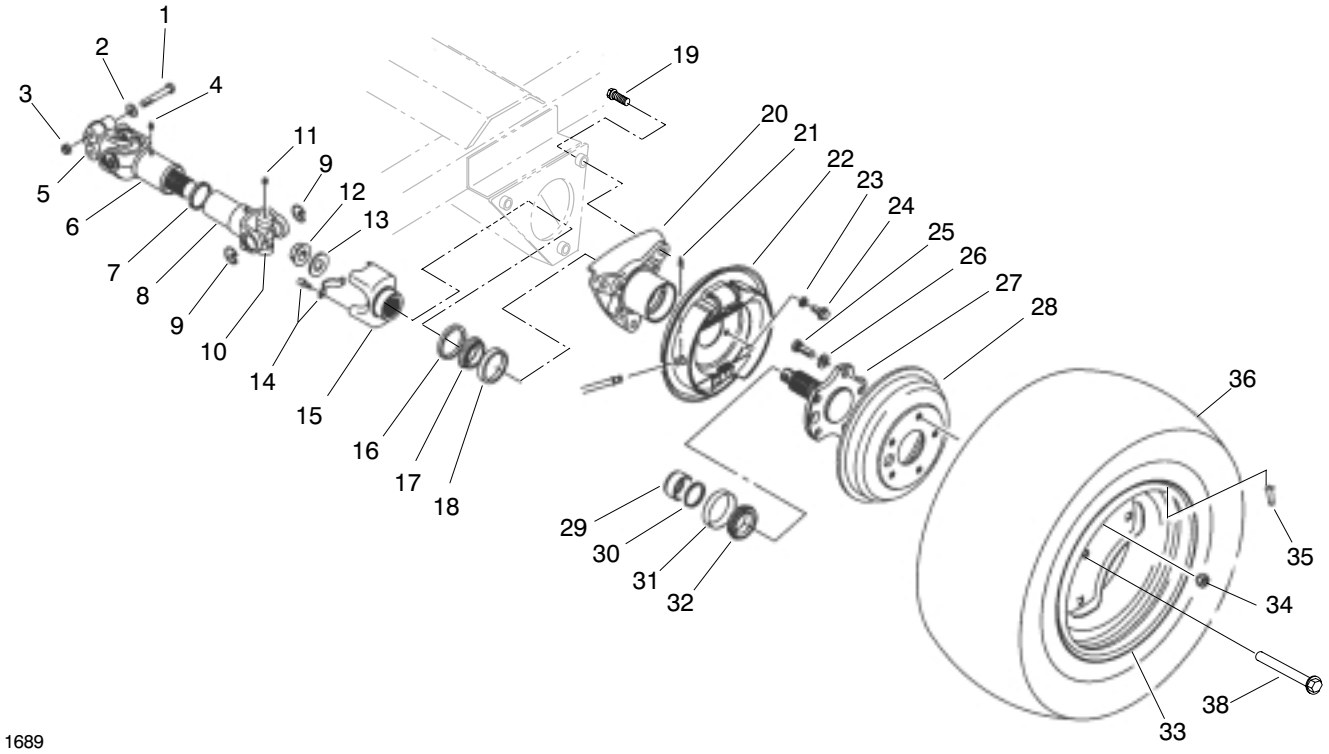

REAR AXLE ASM

#	Part No.	Description	Qty
1	87-8700	HH Screw	4
2	80-6990	Washer	4
3	32128-36	Lock Nut	4
4	302-5	Grease Fitting	2
5	98-2940	Double Clamp Yoke	2
6	92-4179	Shaft & Seal Tube Yoke	2
7	92-4180	Seal	2
8	92-4182	Yoke & Hub	2
9	92-4188	Snap Ring	12
10	92-4187	Cross & Bearing Kit	4
11	302-58	Grease Fitting	16
12	105-1764	HFH Nut	2
13	104-9216	Flat Washer	2
14	92-4189	Strap & Bolt Kit	2
15	92-4190	End Yoke	2
16	87-3590	Bearing Seal	2
† 17		Bearing Cone	1
† 18		Bearing Cup	1
19	3234-22	HH Flange Bolt	6
*	98-2969	1/2 Yoke Kit (Incl. #14-15)	2
*	87-5370	Rear Tire & Wheel (24") ASM (Incl. #33, 35 & 36)	2
*	98-2967	Driveshaft ASM Kit (Incl. #1 & 37)	2

#	Part No.	Description	Qty
20	87-2240	Axle Housing	2
21	87-3310	Brake Cable Clip	2
22	93-7126	LH Brake ASM	1
*	93-7125	RH Brake ASM	1
23	3253-21	Lock Washer	8
24	323-6	HH Screw	8
25	87-2080	Drive Stud	10
26	3253-6	Lock Washer	10
27	105-1717	Axle Stub	2
28	93-7128	Brake Drum	2
29	87-4060	Bearing Spacer	2
† 30		Spacer	1
† 31		Bearing Cup	1
† 32		Bearing Cone	1
33	87-6750	24" Rear Rim	2
34	23-7270	Lug Nut	10
35	232-27	Valve Stem	2
36	87-6740	24" Rear Tire	2
37	98-2918	Driveshaft ASM (Incl. #4-10)	2
38	105-1763	Bolt	2
*	87-1970	Bearing-Matched Set - Use 1 Set per Wheel (Incl. #30-32,17-18)	2
*	98-2968	Yoke Kit (Incl. #1 & 5)	2

† Not Serviced Separately

*Not Illustrated

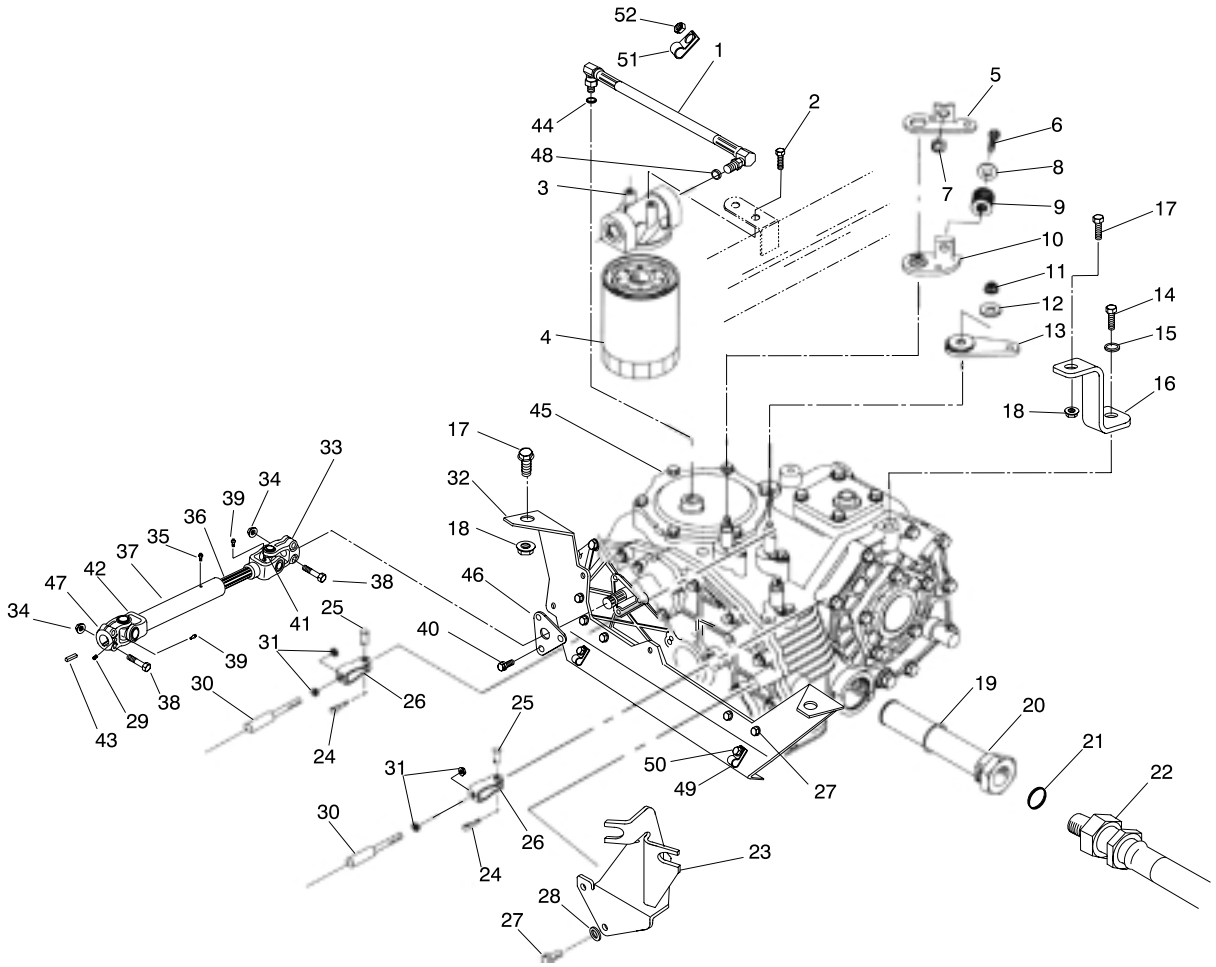

1682-3

TRANSAXLE INSTALLATION ASM

#	Part No.	Description	Qty
1	100-8254	Hydraulic Hose	1
2	3234-26	HH Screw	2
3	87-8780	Oil Filter Head	1
4	54-0110	Oil Filter Element	1
5	87-8250	Shift Arm Plate	1
6	323-10	HH Screw	1
7	32128-21	Lock Nut	1
8	3256-4	Flat Washer	1
9	87-6910	Compression Spring	1
10	87-7970	Shift Arm	1
11	48-9520	Lock Nut	3
12	80-6990	Flat Washer	3
13	87-7960	Shift Arm Lever	2
14	33106-030	HH Screw	2
15	3253-7	Lock Washer	2
16	100-8220	Strap Transaxle Mount	2
17	3234-32	HH Screw	4
18	32128-49	Flange Nut	4
19	237-123	O-Ring	1
20	87-3990	Oil Strainer Asm	1
21	237-81	O-Ring	1
22	100-8250	Hose Suction	1
23	100-8303	Cable Mount ASM	1
24	3272-6	Cotter Pin	3
25	283-62	Clevis Pin	3
26	87-2310	Clevis	2
27	33104-025	HH Screw	10

#	Part No.	Description	Qty
28	3253-4	Lock Washer	10
29	3245-32	Set Screw	1
30	100-8359	Shift Cable	2
31	3220-1	Jam Nut	4
32	100-8531	Plate Transaxle Mount	1
33	100-8632	Splined Yoke	1
34	32128-20	Flange Nut	4
35	302-56	Grease Fitting	1
36	100-8634	Yoke & Shaft	1
37	100-8293	Drive Shaft Input ASM (incl. #29, 33, 35, 36, 39, 41, 42, 47)	1
38	322-7	HH Screw	4
39	2115-80	Grease Fitting (65°)	2
40	100-6928	Bolt	3
41	54-9180	Universal Joint Kit (incl.#39)	2
42	100-8631	Yoke, Tube, & Slip Sleeve	1
43	92-0049	Key	1
44	237-42	O-Ring	1
45	99-0614	Transaxle	1
46	100-8594	In-put Shaft Cover Plate	1
47	100-8633	Keyed Yoke	1
48	237-79	O-Ring	1
49	2412-10	R-Clamp (Emergency Brake)	2
50	3234-4	Bolt	2
51	2412-81	R-Clamp	1
52	3296-42	Nut	1

* Not Illustrated

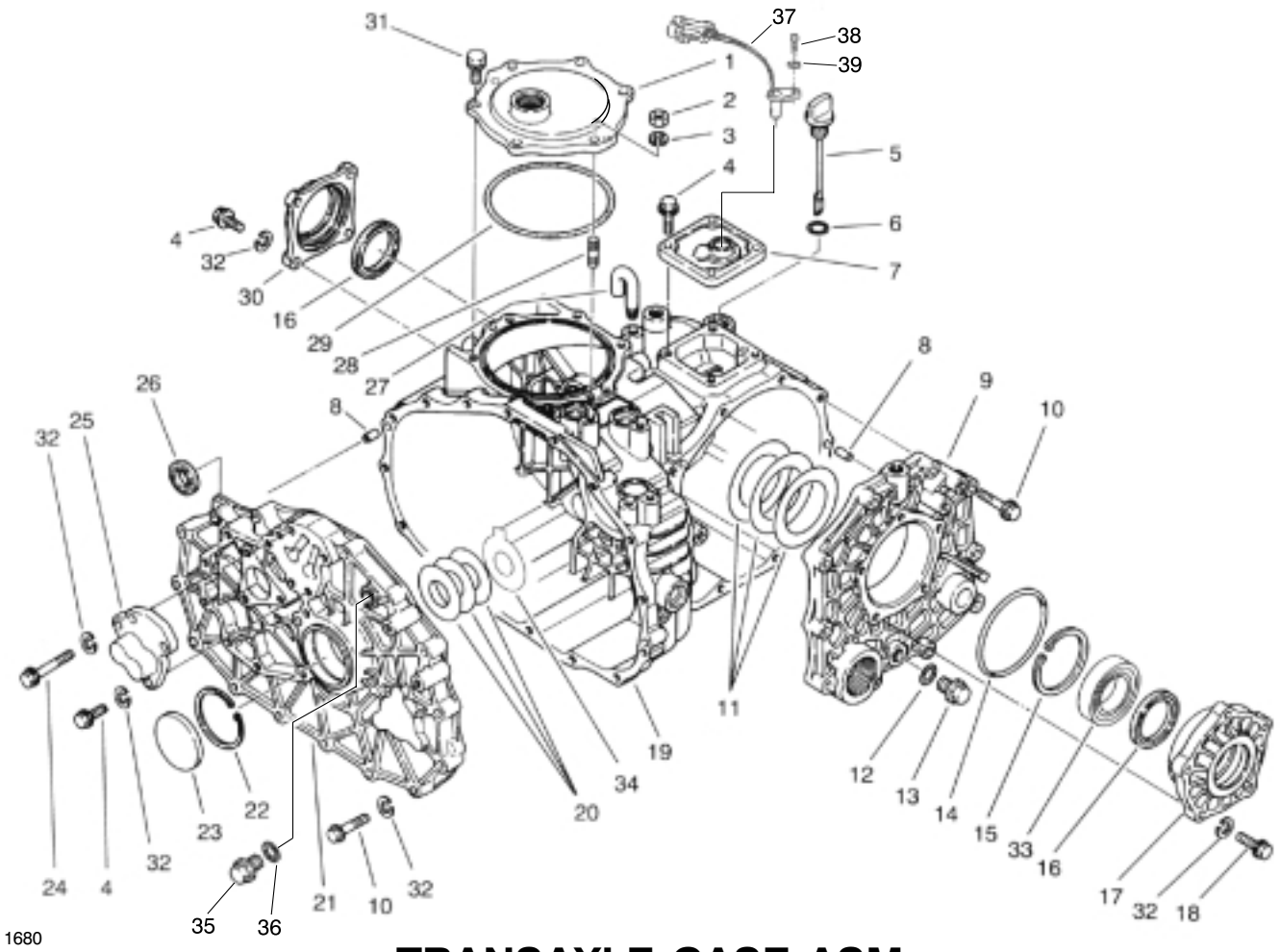

TRANSAXLE CASE ASM

#	Part No.	Description	Qty
1	100-8595	Power Take Off Cover	1
2	48-7930	Hex. Nut	1
3	92-0762	Lock Washer	1
4	60-6750	HH Screw	11
5	92-0662	Oil Cap	1
6	92-0788	O-Ring	1
† 7	92-0810	Cover	1
8	92-0765	Alignment Pin	4
9	92-0653	Cover- Side	1
10	42-9530	HH Screw	25
11	92-0809	Shim Set	1
12	92-0787	O-Ring	1
13	92-0773	Drain Plug Asm (Incl. Ref. # 12)	1
14	92-0789	O-Ring	1
15	92-0760	Retaining Ring	1
16	92-0793	Oil Seal	2
17	92-0654	Differential Carrier	1
18	48-7730	HH Screw	5
19	92-0651	Transaxle Case	1
20	100-4460	Shim Set	1

#	Part No.	Description	Qty
21	100-4461	Center Plate	1
22	92-0759	Retaining Ring	1
23	92-0807	Sealing Cap	1
24	48-7560	HH Screw	1
25	92-0706	Fork Shaft Cap	1
26	92-0791	Oil Seal	1
27	92-0743	Air Breather	1
28	92-0804	Stud	1
29	92-0790	O-Ring	1
30	92-0655	Seal Cover	1
31	92-0796	HH Screw	5
32	42-9850	Lock Washer	42
33	92-0775	Bearing- Ball	2
34	100-4465	Shim w/Tab	1
35	100-6924	Plug	1
36	100-6925	Packing	1
37	85-4350	Speed Sensor	1
38	48-7610	HH Screw	1
39	48-8020	Lock Washer	1
† *	92-3735	Oil Seal	AR

† Part included in Cover ASM 92-3736 * Not Illustrated

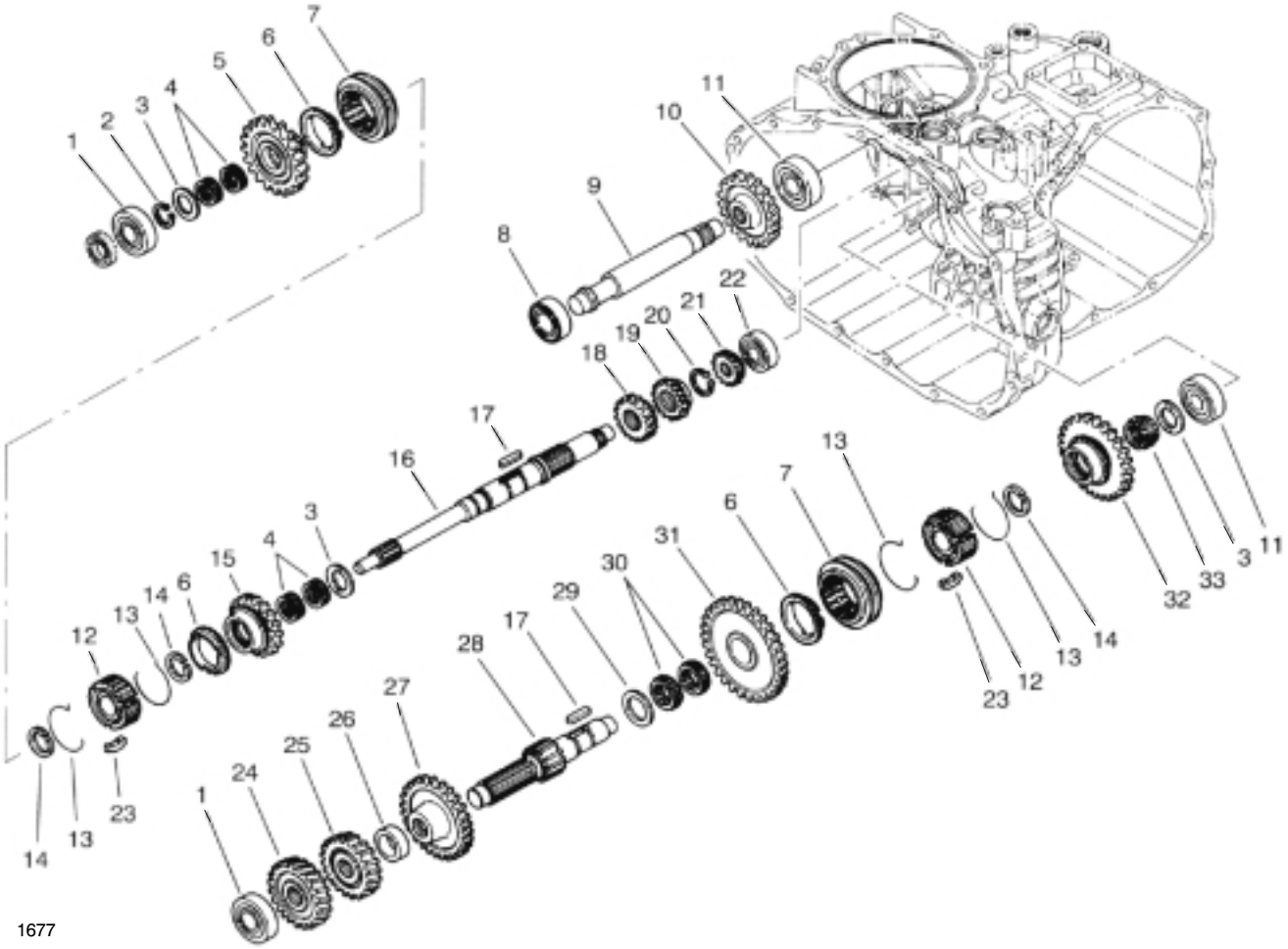

TRANSAXLE GEAR SHAFTS ASM

#	Part No.	Description	Qty
1	251-8	Bearing- Ball	2
2	92-0753	Retaining Ring	1
3	92-0740	Thrust Washer	3
4	92-0781	Bearing- Needle	4
5	100-8597	Gear-36T	1
6	92-0667	Synchro Ring	3
7	92-0668	Synchro Shifter	2
8	251-346	Bearing- Ball	1
9	100-8602	Reverse Idler Shaft	1
10	92-0684	Gear- 33T	1
11	92-0778	Bearing- Ball	2
12	92-0664	Synchro Hub	2
13	92-0666	Synchro Spring	4
14	92-0763	Retaining Ring	3
15	92-0671	Gear- 22T	1
16	100-8596	Main Shaft	1
17	92-0772	Key	2

#	Part No.	Description	Qty
18	92-0687	Gear- 16T	1
19	100-8598	Gear- 20T	1
20	92-0754	Retaining Ring	1
21	92-0673	Gear- 14T	1
22	92-0650	Bearing- Ball	1
23	92-0665	Synchro Key	6
24	100-8599	Gear- 25T	1
25	92-0679	Gear- 23T	1
26	100-8601	Collar	1
27	92-0676	Gear- 32T	1
28	92-0674	Reduction Shaft	1
29	92-0682	Thrust Washer	1
30	92-0681	Bearing- Needle	2
31	100-8600	Gear- 47T	1
32	92-0819	Gear- 40T	1
33	92-0782	Bearing- Needle	1

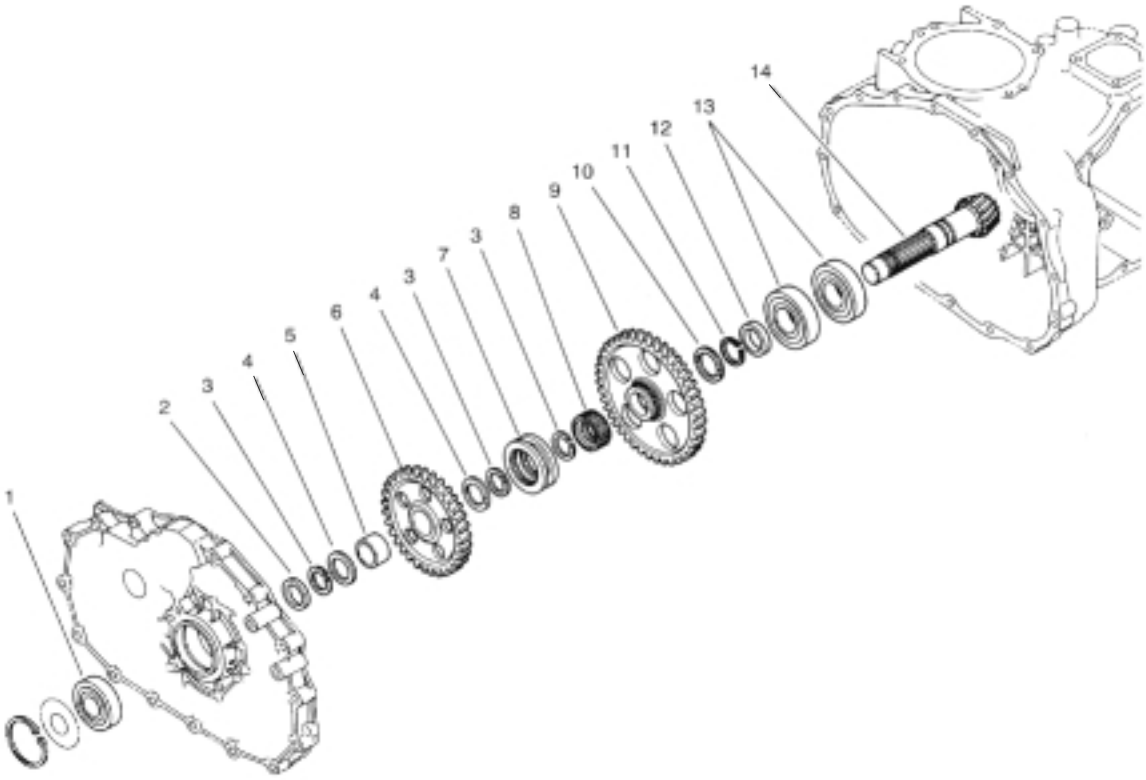

1676

COUNTERSHAFT ASM

#	Part No.	Description	Qty
1	92-0712	Bearing- Ball	1
2	92-0716	Collar	1
3	92-0764	Ring- Retaining	3
4	92-0711	Washer- Thrust	2
5	92-0783	Sleeve- Inner	1
6	92-0715	Gear- 49T	1
7	92-0718	Shifter- Hi- Lo	1
8	92-0719	Collar- Spline	1

#	Part No.	Description	Qty
9	100-8603	Gear- 71T	1
10	92-0741	Washer- Thrust	1
11	92-0755	Ring- Retaining	1
12	92-0713	Collar	1
13	92-0714	Bearing- Ball	2
14	92-0710	Counter Shaft ASM (Incl. Ring Gear)	1

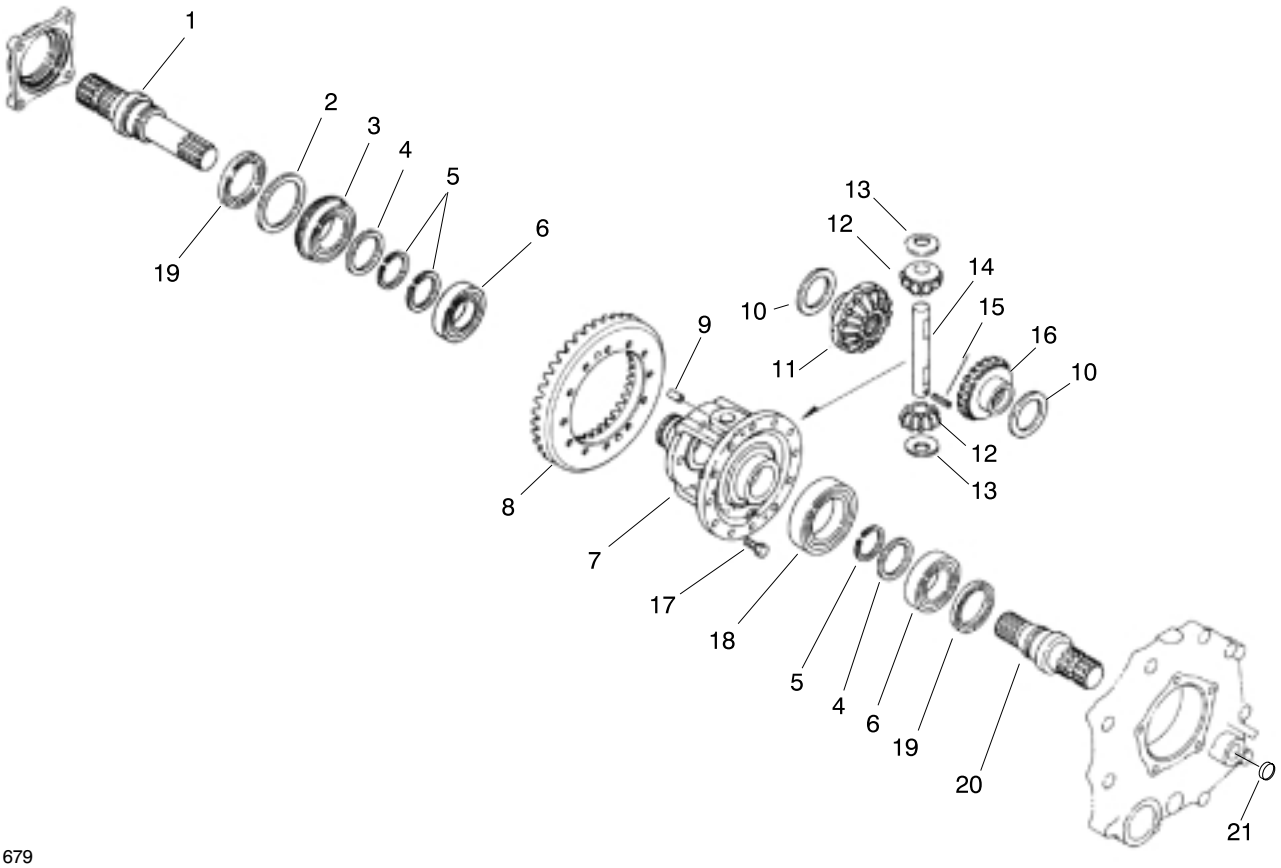

1679

DIFFERENTIAL GEAR ASM

#	Part No.	Description	Qty
1	92-0726	Axle Shaft R.H.	1
2	92-0728	Washer	1
3	92-0780	Bearing- Ball	1
4	92-0727	Washer	2
5	92-0756	Retaining Ring	3
6	92-0775	Bearing- Ball	2
7	92-0720	Differential Case	1
8	92-0710	Ring Gear ASM (Incl. Counter Shaft)	1
9	92-0765	Alignment Pin	2
10	92-0747	Thrust Washer	2

#	Part No.	Description	Qty
11	92-0746	Gear R.H. Side	1
12	92-0748	Pinion Gear	2
13	92-0750	Washer	2
14	92-0749	Pinion Shaft	1
15	92-0768	Spring Pin	2
16	92-0745	Gear- L.H. Side	1
17	92-0803	HHF Screw	12
18	92-0776	Bearing- Ball	1
19	92-0793	Oil Seal	2
20	92-0725	Axle Shaft L.H.	1
21	100-6926	Sealing Cap	1

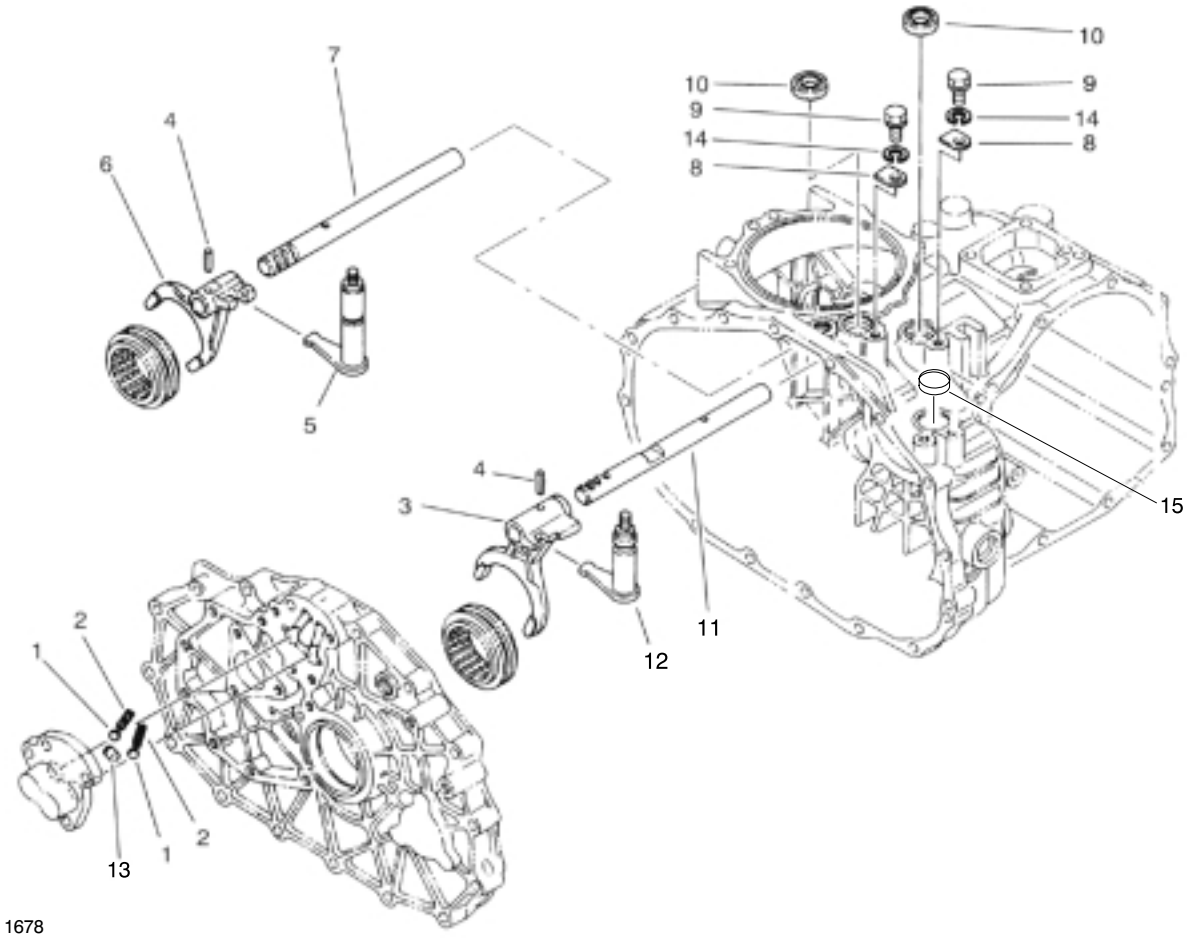

SHIFT FORK ASM

#	Part No.	Description	Qty
1	92-0785	Ball	2
2	92-0731	Compression Spring	2
3	92-0700	Shift Fork R-1	1
4	92-0769	Spring Pin	2
5	92-0817	Shift Fork Arm 2-3	1
6	92-0701	Shift Fork 2-3	1
7	92-0699	Fork Shaft 2-3	1
8	92-0732	Keeper Plate	2

#	Part No.	Description	Qty
9	48-7700	HH Screw	2
10	92-0729	Oil Seal	2
11	92-0698	Fork Shaft R-1	1
12	92-0816	Shift Fork Arm R-1	1
13	92-0705	Spindle Lock	1
14	42-9850	Lock Washer	2
15	100-6927	Sealing Cap	1

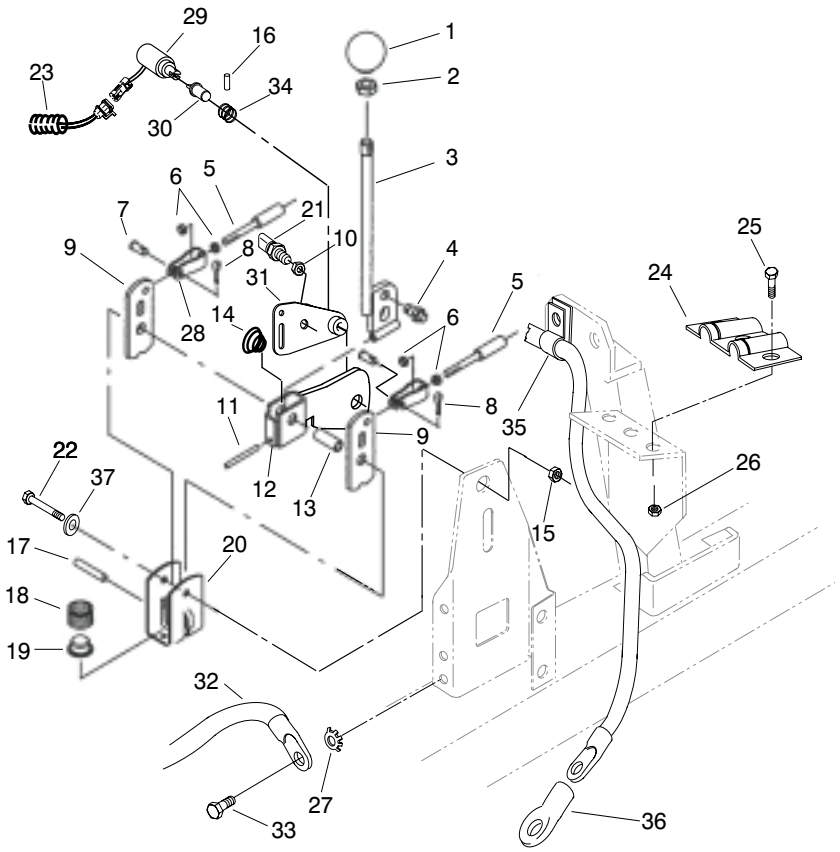

1688

SHIFT LEVER ASM

#	Part No.	Description	Qty
1	87-6720	Knob	1
2	3218-18	Jam Nut	2
3	87-2040	Shift Lever	1
4	87-3650	Shift Pin	1
5	100-8359	Cable ASM	2
6	3220-1	Jam Nut	4
7	283-62	Clevis Pin	2
8	3272-6	Cotter Pin	2
9	87-3540	Shift Link	2
10	3220-11	Jam Nut	1
11	32121-48	Roll Pin	1
12	100-6749	Shifter Bracket ASM	1
13	87-2520	Pivot Tube	1
14	87-2900	Compression Spring	1
15	3296-29	Lock Nut	1
16	32121-7	Spring Pin	1
17	3290-507	Dowel Pin	1
18	87-3660	Compression Spring	1
*	99-0734	Fuse- 2 AMP	1

#	Part No.	Description	Qty
19	87-3530	Shifter Button	1
20	87-3520	Clevis	1
21	83-1890	Ball Switch	1
22	322-12	HH Screw	3
23	100-6751	Wire Harness, Shift Limiter	1
24	87-4960	Bracket	1
25	321-3	HH Screw	3
26	32128-33	Flange Nut	3
27	93-0899	Spark Arrester (optional)	1
28	87-2310	Cable Clevis	2
29	100-6741	Solenoid	1
30	100-6746	Pin	1
31	100-6747	Solenoid Mount ASM	1
32	042617	Engine Ground Cable	1
33	3234-5	Hex Head Bolt	1
34	100-6754	Spring	1
35	2412-81	R-Clamp	1
36	104-8798	Boot	1
37	356303	Flat Washer	1

* Not Illustrated

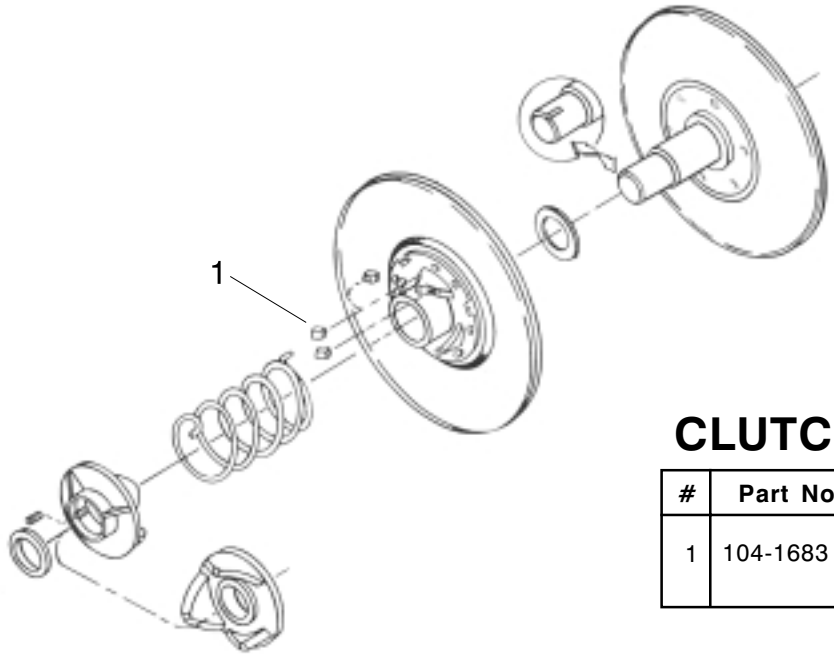

1762

CLUTCH-DRIVEN 100-8289

#	Part No.	Description	Qty
1	104-1683	Button	6

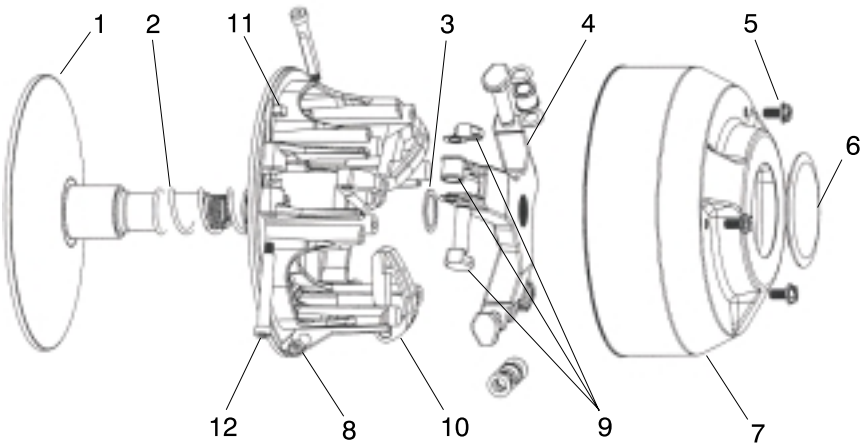

1763

CLUTCH-DRIVE 100-8288

#	Part No.	Description	Qty
1	104-1685	Fixed Face & Post	1
2	100-6921	Spring	1
3	104-1687	Spacer	1
4	104-1688	Spider & Roller ASM	1
5	104-1689	Screw	3
6	104-1690	Cap	1
7	104-1691	Cover	1
8	104-1692	Movable Face ASM	1
9	104-1697	Spider Roller Kit	1
10	100-6922	Cam Arm	1
11	104-1694	Nut	1
12	104-1695	Pivot Bolt	1

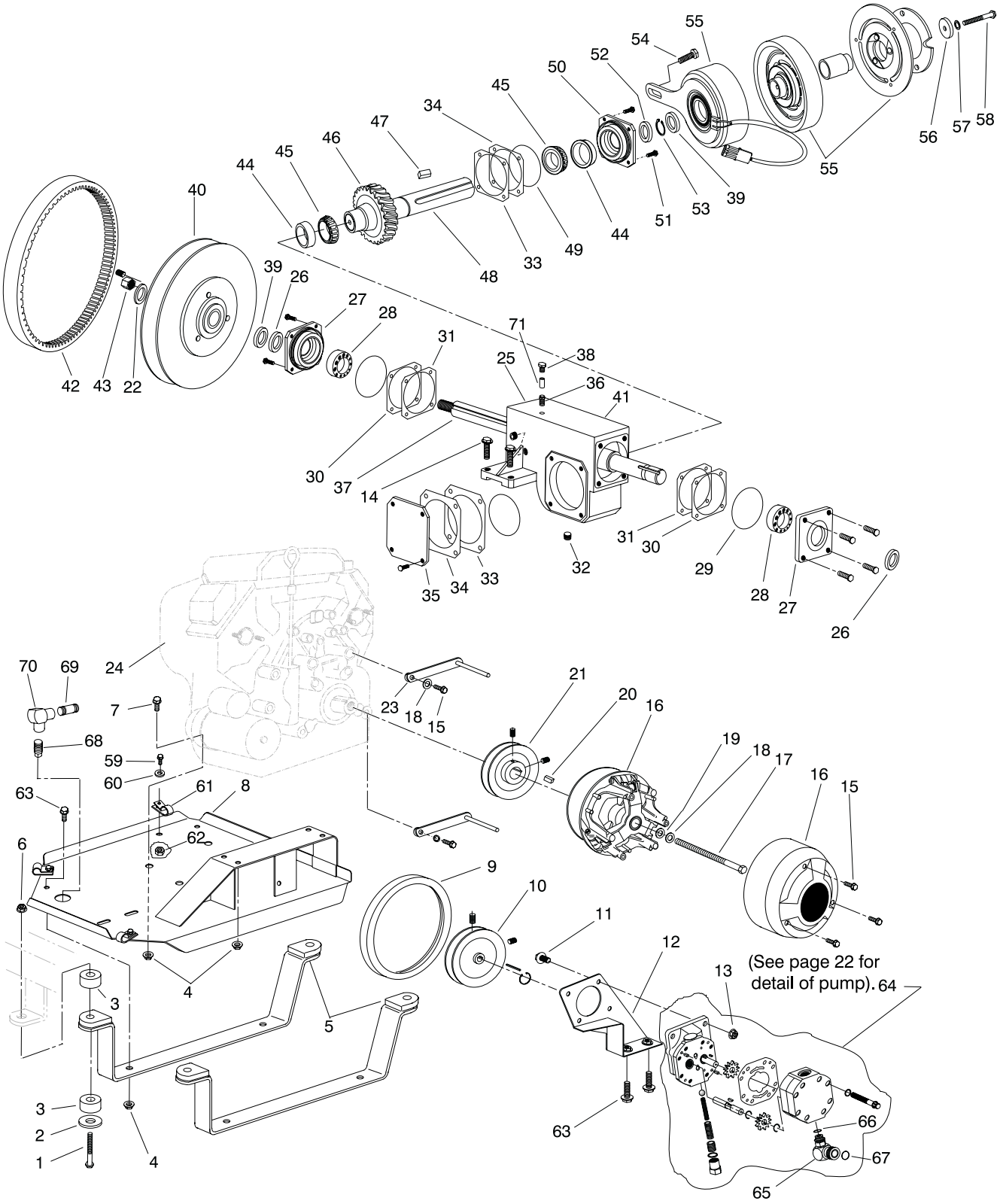

1696

ENGINE MOUNT ASM

	#	Part No.	Description	Qty
	1	325-11	Cap Screw	4
	2	41985	Washer	4
	3	87-4970	Isolation Mount ASM	4
	4	32128-43	Lock Nut	12
	5	100-8377	Engine Support Strap	2
	6	32128-49	Lock Nut	4
	7	3234-19	Bolt	4
	8	100-8357	Engine Mount Plate	1
	9	100-8372	Steering Belt	1
	10	100-8371	Pulley (w/Set Screws)	1
	11	3234-5	Screw	4
	12	100-8368	Steering Pump Brkt. ASM	1
	13	32128-20	Nut	4
	14	3234-24	Bolt	4
	15	324-5	Screw	3
**	16	100-8288	Clutch Driver ASM	1
	17	3212-16	Bolt	1
	18	3253-6	Lock Washer	3
	19	3256-25	Flat Washer	1
	20	100-8260	Key (Engine Shaft)	1
	21	92-0488	Pulley (w/Set Screws)	1
	22	3256-28	Washer	1
	23	100-8373	Belt Guide ASM	2
	24	99-0819	Engine	1
	25	99-0663	Gearbox Pump Drive	1
	26	100-6929	Seal	2
	27	100-6930	Open Cap	2
	28	251-348	Bearing Ball	2
	29	100-6932	O-Ring	2
	30	100-6933	Red Shim	1
	31	100-6934	Blue Shim	1
	32	281-10	Plug	2
	33	100-6936	Blue Shim	1
	34	100-6937	Red Shim	1
	35	100-6938	Close Cap	1
	36	104-8766	Nipple	1

	#	Part No.	Description	Qty
	37	100-6940	Worm Shaft	1
	38	100-6931	Breather	1
	39	100-8390	Spacer	1
**	40	100-8289	Pulley Driven	1
	41	100-6935	Gear Box	1
	42	99-0735	Belt	1
	43	100-8486	Left Hand Locknut	1
	44	254-72	Bearing Cup	2
	45	254-94	Bearing Cone	2
	46	100-6944	Worm Gear	1
	47	92-0049	Key	2
	48	100-6946	Shaft Output	1
	49	237-161	O-Ring	2
	50	100-6948	Open Cap	1
	51	321-3	Bolt	16
	52	104-8764	Seal	1
	53	32151-36	Snap-Ring	1
	54	59-5400	Shoulder Bolt	1
	55	100-8290	Electric Clutch Pump Drive	1
	56	100-8391	Retrainer Electric Clutch	1
	57	3253-11	Lock Washer	1
	58	3211-10	Screw	1
	59	3234-4	Cap Screw	1
	60	3256-23	Flat Washer	1
	61	2412-81	R-Clamp (Fuel Line)	3
	62	32128-33	Lock Nut - Flange	1
	63	3234-11	Cap Screw	6
	64	100-8302	Pump - Steering	1
	65	100-8255	90° Suction Fitting	1
	66	237-80	O-Ring	1
	67	237-177	O-RIng	1
	68	42435	Pipe Plug	1
	69	92-3647	Pipe Nipple	1
	70	95023	90° Hyd. Elbow	1
	71	005192	Coupling	1

* Not Illustrated

**See page 33 for details.

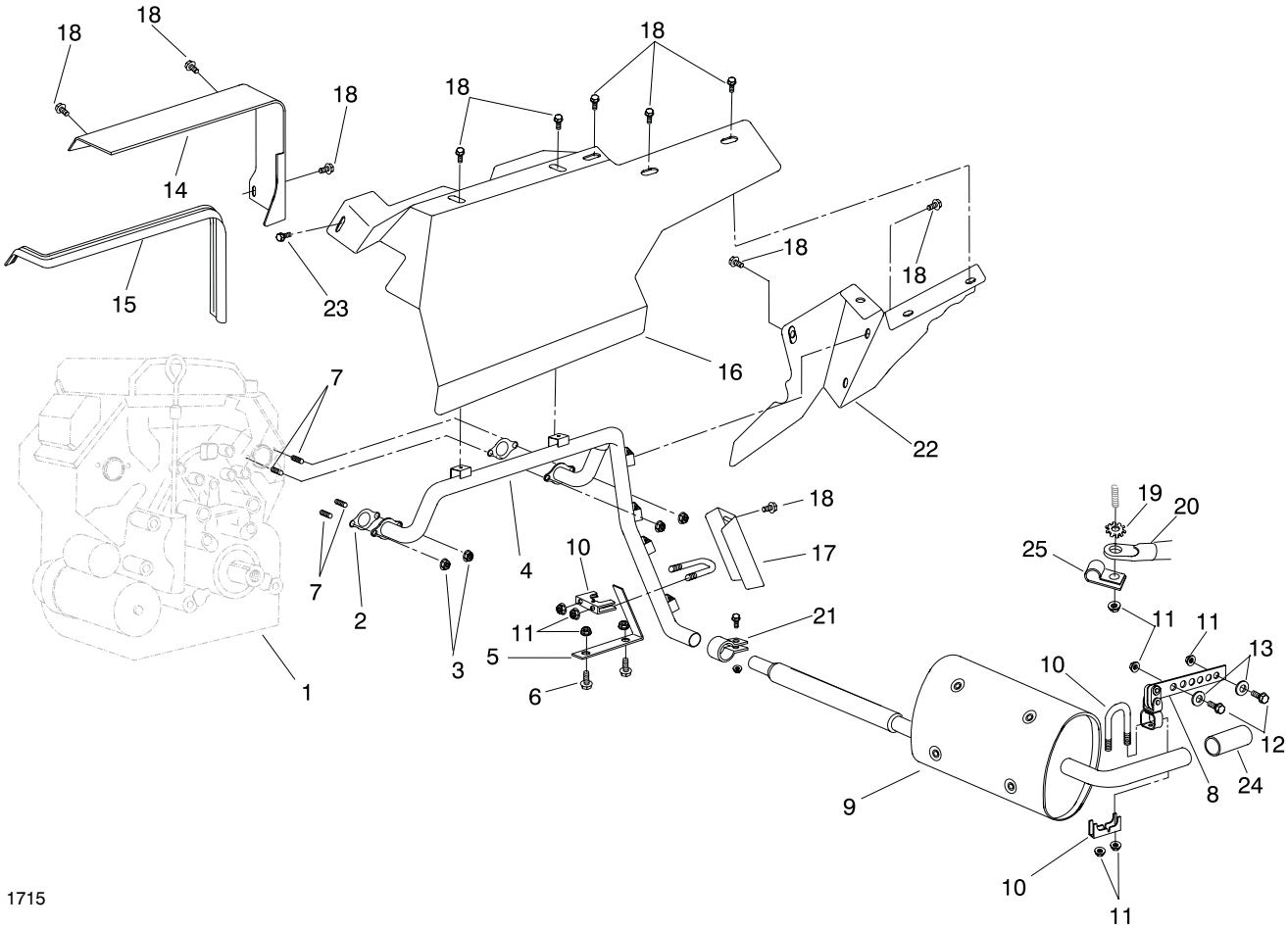

EXHAUST

#	Part No.	Description	Qty
1	99-0819	Engine	1
2	24 041 02-S	Exhaust Gasket (Kohler)	2
3	M-841080-S	Hex Flange Nut (Kohler)	4
4	100-8291	Header Pipe ASM	1
5	100-8527	Support Header	1
6	3234-5	Flange Bolt	2
7	25 072 04-S	Stud M8 x 1.25 x 33 (Kohler)	4
8	100-8526	Muffler Hanger Strap	1
9	100-8292	Muffler/Tail Pipe ASM	1
10	2112-11	Muffler Clamp	2
11	32128-20	Flange Nut	11
12	3234-5	Cap Screw	2
13	356303	Washer Special	1

#	Part No.	Description	Qty
14	100-7025	Heat Shield ASM, Front	1
15	100-7027	Trim	1
16	100-7028	Exhaust Shield, Upper	1
17	100-8409	Exhaust Shield, Lower	1
18	3234-26	Cap Screw	13
19	3255-8	External Tooth Lockwasher	1
20	99060	Ground Cable (Battery)	1
21	100-6972	Muffler Clamp w/Screw & Nut	1
22	100-7029	Muffler Heat ASM	1
23	33103-012	Metric Screw	1
24	93-0899	Spark Arrester (Optional)	1
25	2412-81	R-Clamp (for Positive Cable)	1

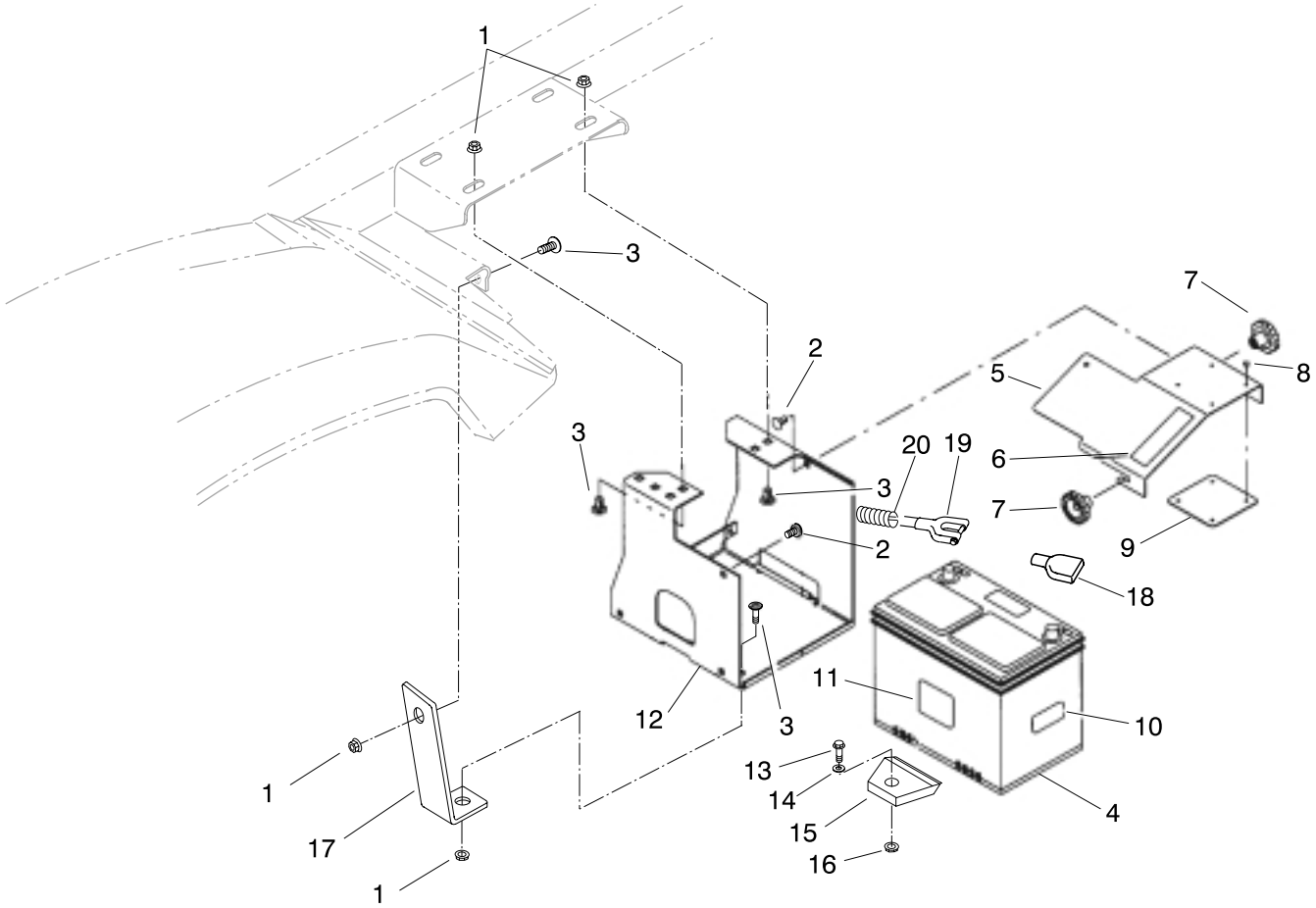

1686

BATTERY MOUNT ASM

#	Part No.	Description	Qty
1	32128-43	Nut-HFH	4
2	3230-1	CARR Bolt	2
3	3231-1	CARR Bolt	4
4	92-3516	Battery	1
5	87-5130	Battery Base Cover	1
6	36-3400	Decal- No Step	1
	93-6687	Decal- No Step (Europe)	1
	84-2780	Decal- No Step (Japan)	1
7	19-4050	Knob	2
8	3269-27	Plastic Rivet	4
9	87-7620	Plastic Shield	1
10	93-6668	Decal-Danger (Europe)	1

#	Part No.	Description	Qty
11	93-7276	Decal Charging (Europe)	1
12	87-5120	Battery Mounting Box	1
13	322-9	Bolt-HH	1
14	3256-3	Washer	1
15	66-2490	Battery Retainer	1
16	32128-20	Nut-HFH	1
17	100-8201	Support Battery	1
18	100-8439	Battery Cable (Positive) w/Cap	1
	41138	Protective Cap	1
19	099060	Ground Cable	1
20	104-8742	Conduit- Battery Cable	1
*	2412-81	R-Clamp (Small)	4
*	2412-82	R-Clamp (Battery Cable & Emergency Brake Cable)	2

* Not Illustrated

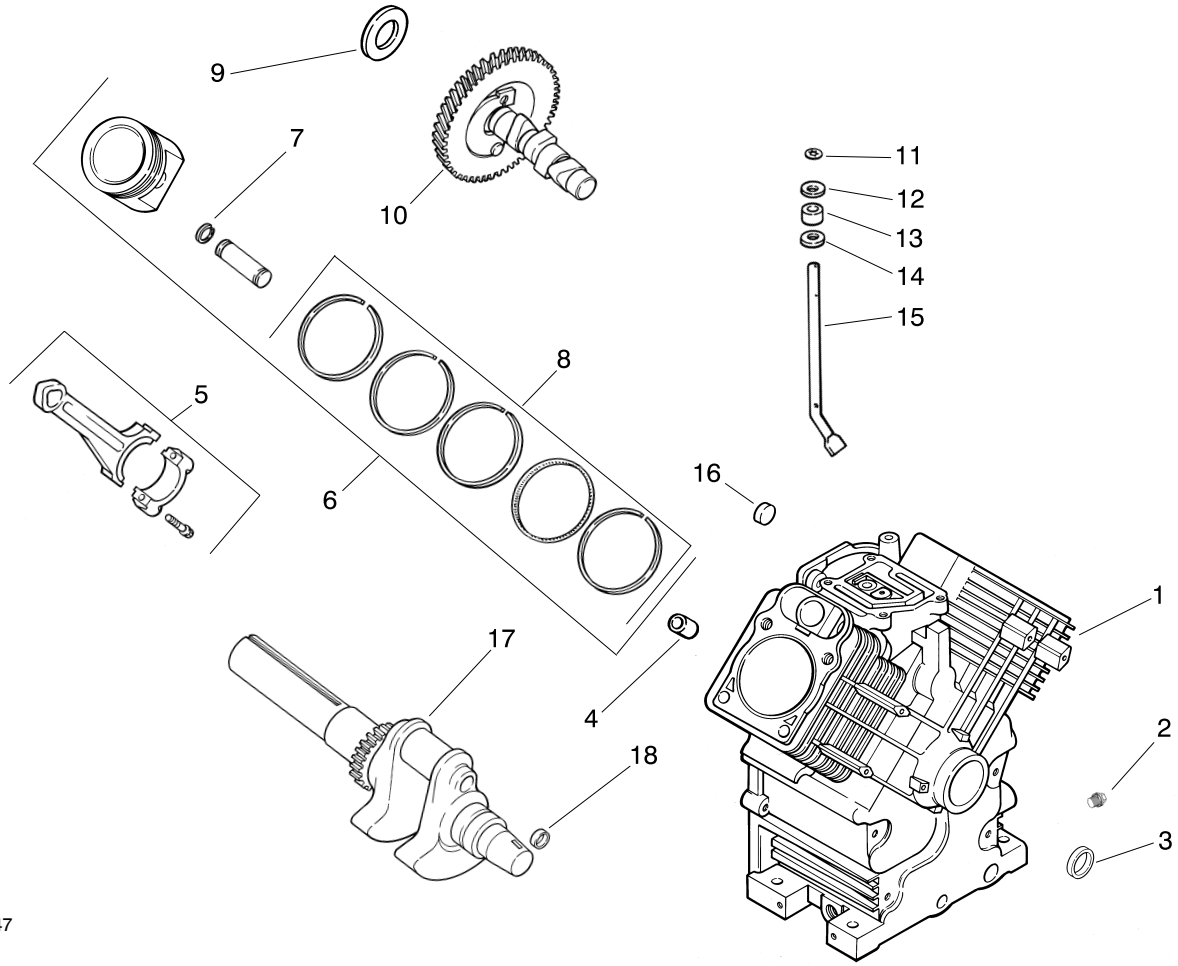

ENGINE KOHLER MODEL CH20S SPEC. NO. 64647

#	Part No.	Description	Qty
1	24 782 15	Cylinder Block	1
2	X-75-10-S	Hex Head Plug	2
3	24 032 01-S	Oil Front Seal	1
4	12 380 17-S	Locating Pin	6
5	24 067 13-S	Connecting Rod (Std.)	2
	24 067 14-S	Connecting Rod (.25)	2
6	24 874 01-S	Piston w/Ring Set (Std.) (includes #7 & 8)	2
	24 874 02-S	Piston w/Ring Set (.25)	2
	24 874 19-S	Piston w/Ring Set (.50)	2
	24 874 14-S	Piston w/Ring Set (.08)	2
7	24 018 01-S	Piston Pin Retainer	4
8	24 108 01-S	Ring Set (Std.)	2
	24 108 02-S	Ring Set (.25)	2
	24 108 03-S	Ring Set (.50)	2

#	Part No.	Description	Qty
9	12 422 09-S	Shim, Camshaft (A.R.) red	1
	12 422 13-S	Shim, Camshaft (A.R.) black	1
	12 422 07-S	Shim, Camshaft (A.R.) white	1
	12 422 08-S	Shim, Camshaft (A.R.) blue	1
	12 422 10-S	Shim, Camshaft- yellow	1
	12 422 11-S	Shim, Camshaft (A.R.) green	1
	12 422 12-S	Shim, Camshaft (A.R.) gray	1
10	24 012 10-S	Camshaft	1
11	24 018 09-S	Retainer Ring	1
12	M-931010-S	Plain Washer	1
13	28 032 09-S	Seal, Governor Cross Shaft	1
14	34 468 15-S	Plain Washer	1
15	24 144 33-S	Governor Cross Shaft	1
16	52-139 09-S	Cup Plug	1
17	24 014 103-S	Crankshaft (includes #18)	1
18	52-139 09-S	Cup Plug	1

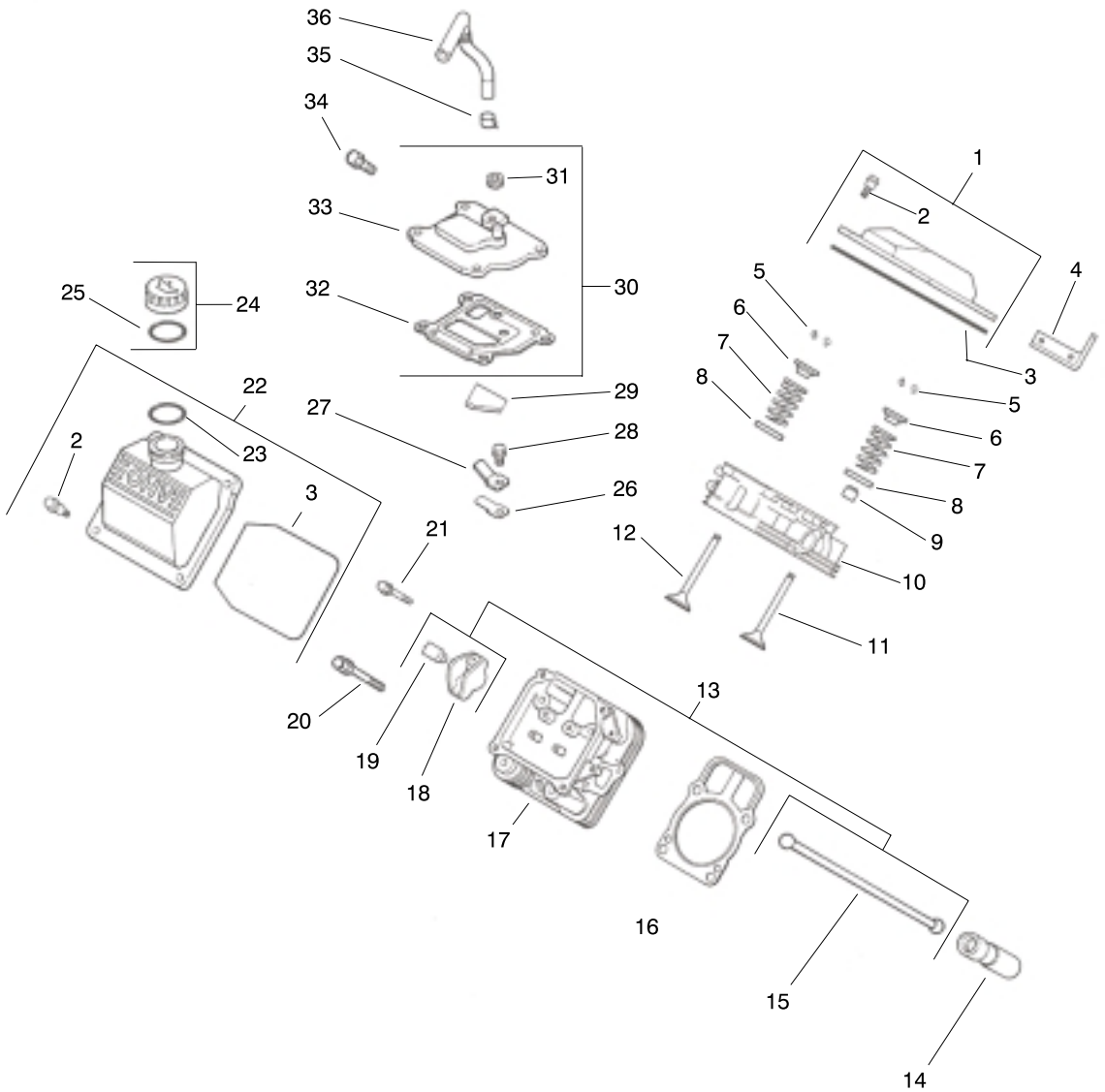

ENGINE KOHLER MODEL CH20S SPEC. NO. 64647

#	Part No.	Description	Qty
1	24 755 74-S	Valve Cover - Plain Kit (includes #2 & 3)	1
2	24 086 32-S	Shoulder Screw	4
3	24 153 16-S	Valve Cover O-Ring	1
4	24 445 01-S	Lifting Strap	1
5	12 755 03-S	Retainer Kit	4
6	12 173 01-S	Valve Spring Cap	4
7	24 089 02-2	Valve Spring	4
8	235011-S	Spring Retainer	4
9	24 032 05-S	Valve Stem Seal	2
10	24 318 09-S	Head ASM, No. 1 Cylinder	1
11	24 017 01-S	Intake Valve (Std.)	2
	24 017 02-S	Intake Valve (.25)	2
12	24 016 01-S	Exhaust Valve (Std.)	2
	24 016 02-S	Exhaust Valve (.25)	2
13	24 755 66-S	Valve Train Kit (includes #15, 18, 19)	1
14	25 351 01-S	Valve Lifter	4
15	24 411 05-S	Push Rod	4
16	24 041 08-S	Cylinder Head Gasket	2
17	24 318 10-S	Head ASM, No. 2 Cylinder	1

#	Part No.	Description	Qty
18	25 186 01-S	Rocker Arm	4
19	24 599 01-S	Rocker Arm Pivot	4
20	12 086 16-S	Hex Flange Screw	8
21	M-640034-S	Hex Flange Screw	4
22	24 393-14-S	Valve Cover Kit- Oil Fill (includes #2, 3, 23)	1
23	24 153-09-S	O-Ring	1
24	24 755 46-S	Oil Fill Cap Kit (includes #25)	1
25	24 153 03-S	O-Ring	1
26	24 402 03-S	Breather Reed	1
27	12 018 01-S	Breather Reed Retainer	1
28	M-545010-S	Hex Flange Screw	1
29	24 050 01-S	Breather Filter	1
30	24 033 01-S	Breather Kit (includes #31-33)	1
31	X-75-23-S	Allen Head 1/8" Pipe Plug	1
32	24 041 23-S	Breather Gasket	1
33	24 096 58-S	Breather Cover	1
34	M-645020-S	Hex Flange Screw	4
35	X-426-9-S	Breather Clamp	1
36	24 326 26-S	Breather Hose	1

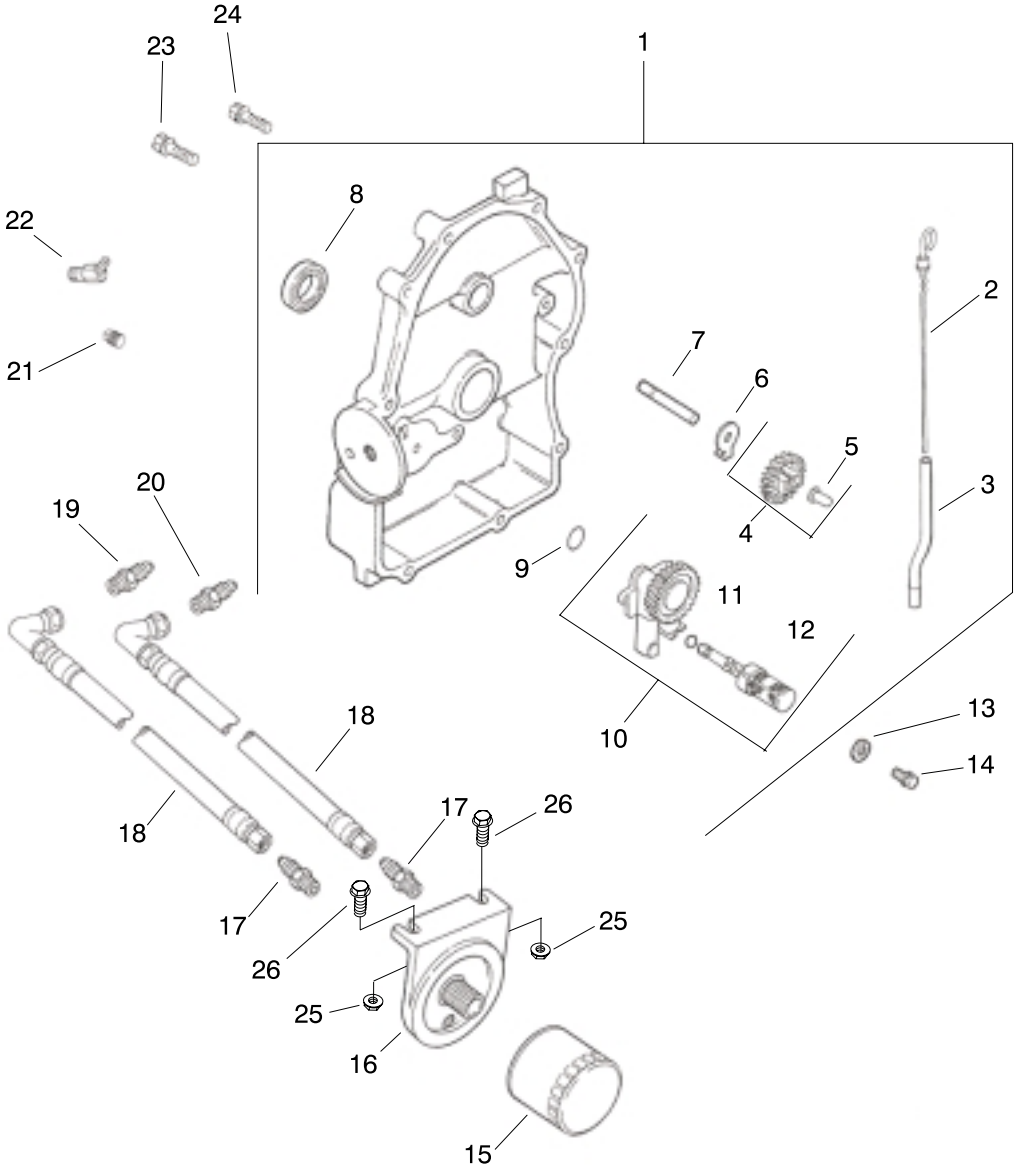

1749

ENGINE KOHLER MODEL CH20S SPEC. NO. 64647

#	Part No.	Description	Qty
1	24 009 96-S	Closure ASM Plate (Inc. #2-12)	1
2	24 038 05-S	Dipstick	1
3	24 123 08-S	Dipstick Tube	1
4	24 043 12-S	Governor Gear Kit (Inc. #5)	1
5	12 380 01-S	Governor Regulating Pin	1
6	52 448 02-2	Locking Tab	1
7	12 144 02-S	Governor Gear Shaft	1
8	52 032 08-S	Oil Seal (PTO End)	1
9	24 153 08-S	O-Ring	1
10	24 393 10-S	Oil Pump ASM (Inc. #11 & 12)	1
11	24 153 01-S	Oil Pick-Up O-Ring	1
12	24 381 04-S	Oil Pick-Up	1
13	M-631005-S	Plain Washer	1

#	Part No.	Description	Qty
14	M-645025-S	Hex Flange Screw	2
15	52 050 02-S	Oil Filter	1
16	25 029 01-S	Remote Filter Adapter	1
17	52 155 03-S	Hose Connector	2
18	24 326 46-S	Oil Hose	2
19	24 294 08-S	Connector Fitting	1
20	24 294 09-S	Connector Fitting	1
21	X-75-23-S	Pipe Plug	2
22	25 155 11-S	45° Hose Connector	1
23	24 086 16-S	Hex Flange Screw	9
24	24 086 17-S	Hex Flange Screw	1
25	32128-33	Nut	2
26	3234-4	Bolt	2

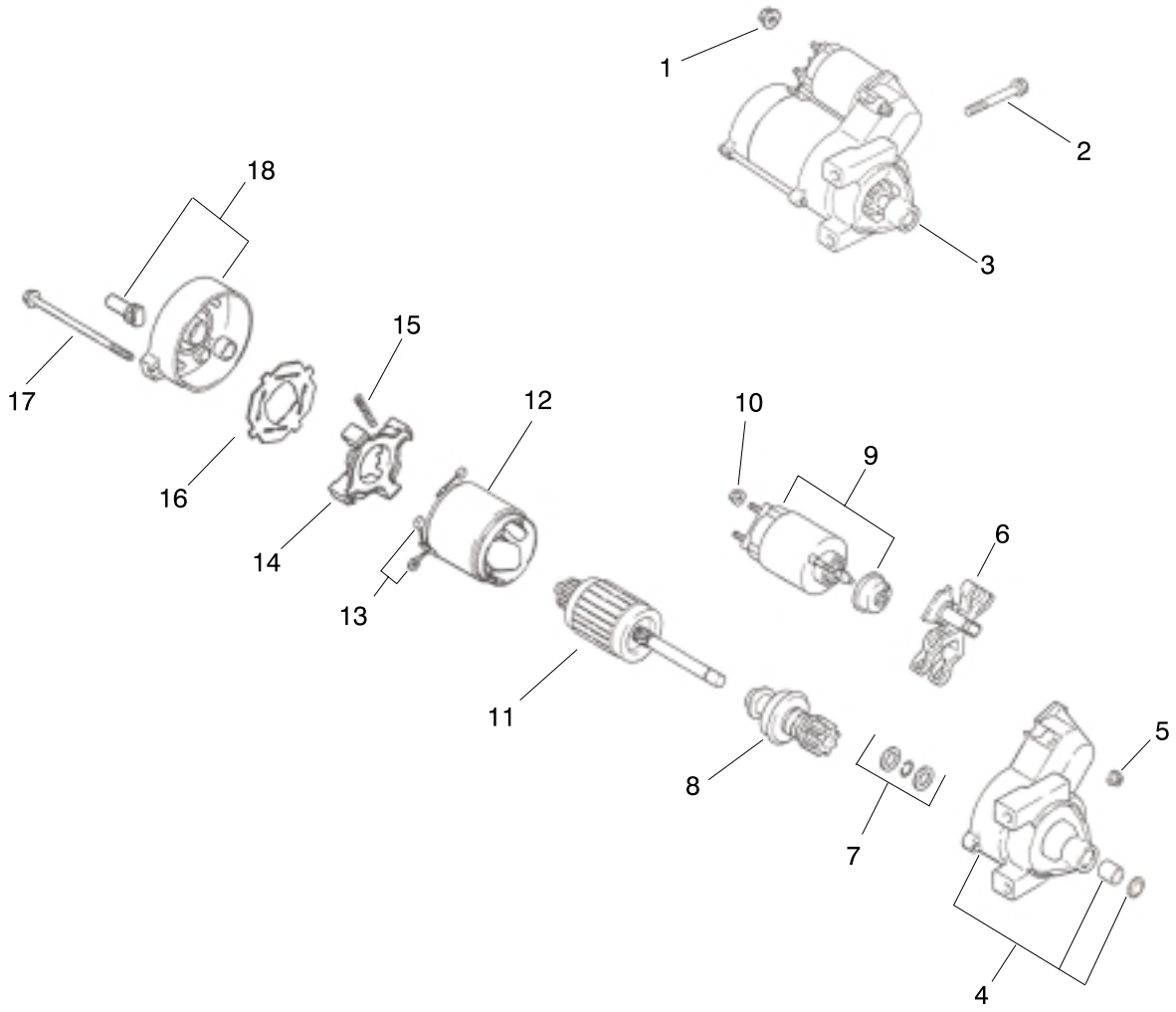

1754

ENGINE KOHLER MODEL CH20S SPEC. NO. 64647

#	Part No.	Description	Qty
1	M-841080-S	Hex Flange Nut	1
2	M-839080-S	Hex Flange Screw	2
3	24 098 01-S	Solenoid Shaft ASM Starter (includes #4-18)	1
4	24 081 04-S	End Cap Drive	1
5	52 100 10-S	Starter Nut	2
6	12 090 10-S	Starter Drive Lever	1
7	24 755 84-S	Starter Repair Kit	1
8	12 239 01-S	Pinion Drive	1
9	52 435 02-S	Solenoid	1

#	Part No.	Description	Qty
10	52 100 09-S	Starter Nut	1
11	12 170 04-S	Starter Armature	1
12	12 471 01-S	Frame	1
13	52 221 01-S	Brush & Spring Kit (Inc. #15)	1
14	52 323 03-S	Brush Holder	1
15	52 089 09-S	Brush Spring	4
16	52 168 01-S	Insulator	1
17	52 211 05-S	Bolt, Thru	2
18	24 301 01-S	End Cap Commutator	1

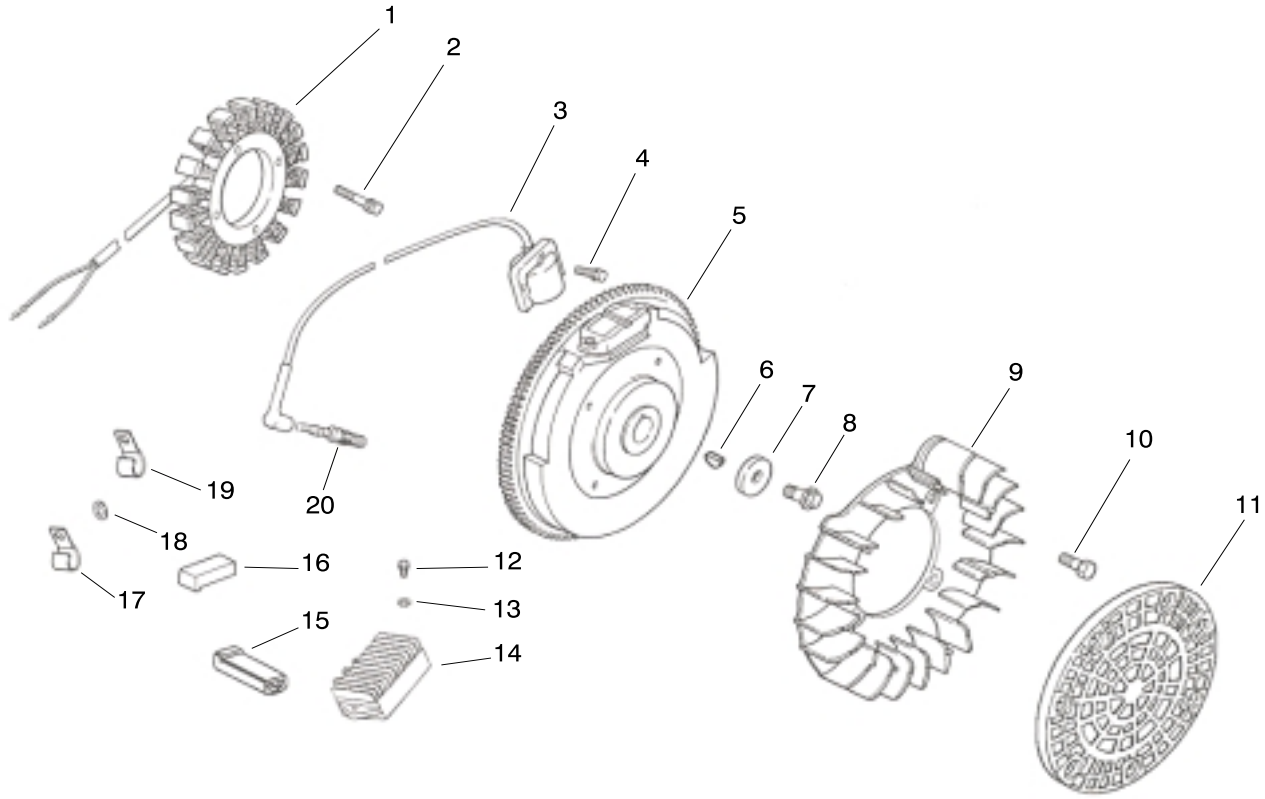

1750

ENGINE KOHLER MODEL CH20S SPEC. NO. 64647

#	Part No.	Description	Qty
1	12 085 02-S	Stator	1
2	M-545030-S	Hex Cap Screw	2
3	24 584 01-S	Ignition Module	2
4	M-545020-S	Hex Flange Screw	4
5	24 025 04-S	Flywheel	1
6	X-42-15-S	Key	1
7	12 468 03-S	Plain Washer	1
8	12 086 14-S	Hex Flange Screw	1
9	24 157 01-S	Fan	1
10	25 086 47-S	Shoulder Bolt	4
*	24 176 72-S	Wiring Harness	1
*	X-22-11-S	Lock Washer (for Ground Screw & Wire)	1

#	Part No.	Description	Qty
11	24 162 03-S	Grass Screen	1
12	24 086 18-S	Phillips Hd. Screw	2
13	X-25-92-S	Plain Washer	2
14	25 403 05-S	20 amp Regulator Rectifier	1
15	25 155 04-S	Connector	2
16	277563-S	Connector (3 contact)	1
17	235173-S	Cable Clip	1
18	X-25-63-S	Plain Washer	1
19	48 154 02-S	Cable Clip	1
20	12 132 02-S	Spark Plug	2
*	24 518 12-S	Lead, Black (5"-12 Gauge-Insulated Grip Barrel Eyelet Terminals)	1

* Not Illustrated

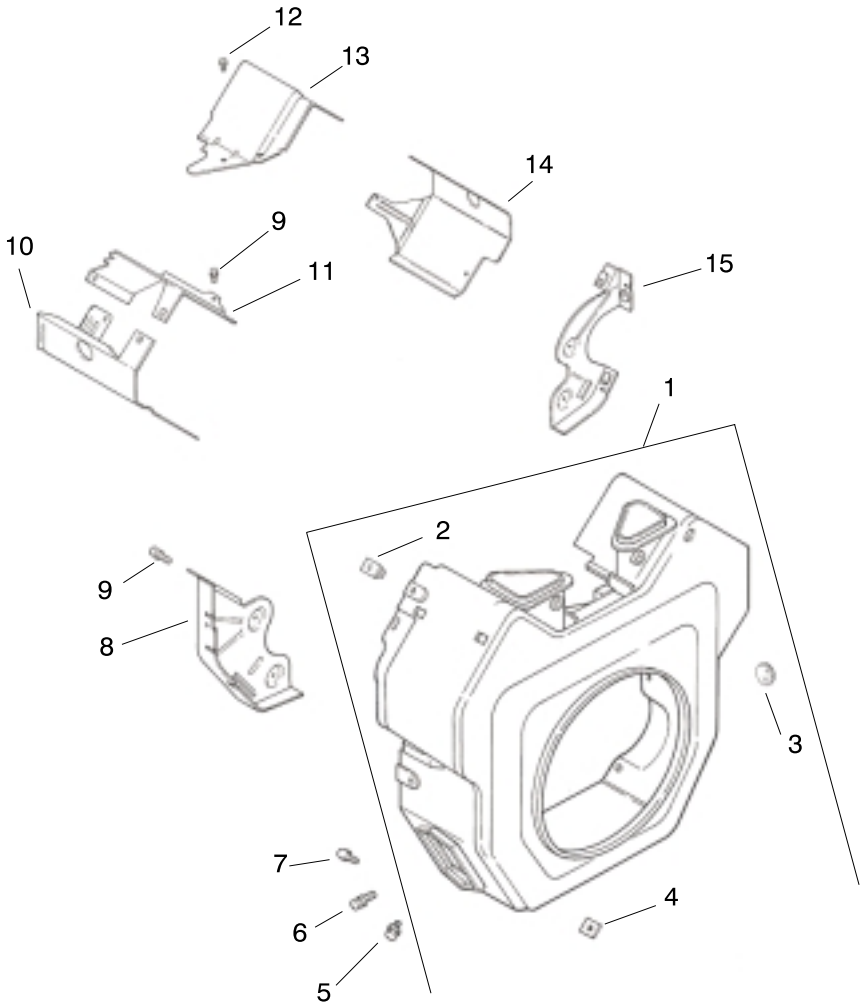

1751

ENGINE KOHLER MODEL CH20S SPEC. NO. 64647

#	Part No.	Description	Qty
1	24 027 20-S	Blower Housing (Inc. #2-4)	1
2	24 100 02-S	Plastic Nut	2
3	25 139 16-S	Button Plug	1
4	24 100 01-S	Plastic Nut	3
5	M-551016-S	Hex Flange Screw	1
6	M-545016-S	Hex Flange Screw	3
7	M-545020-S	Hex Flange Screw	4
8	24 146 16-S	Backing Plate- No. 2 Side	1

#	Part No.	Description	Qty
9	M-645016-S	Hex Flange Screw	6
10	24 063 20-S	Cylinder Barrel Baffle- No. 2 Side	1
11	24 063 17-S	Valley Baffle No. 2 Side	1
12	M-545010-S	Hex Flange Screw	2
13	24 063 24-S	Valley Baffle- No. 1 Side	1
14	24 063 30-S	Cylinder Barrel Baffle- No. 1 Side	1
15	24 146 20-S	Backing Plate- No. 1 Side	1
*	24 113 12-S	Hp Decal	1

* Not Illustrated

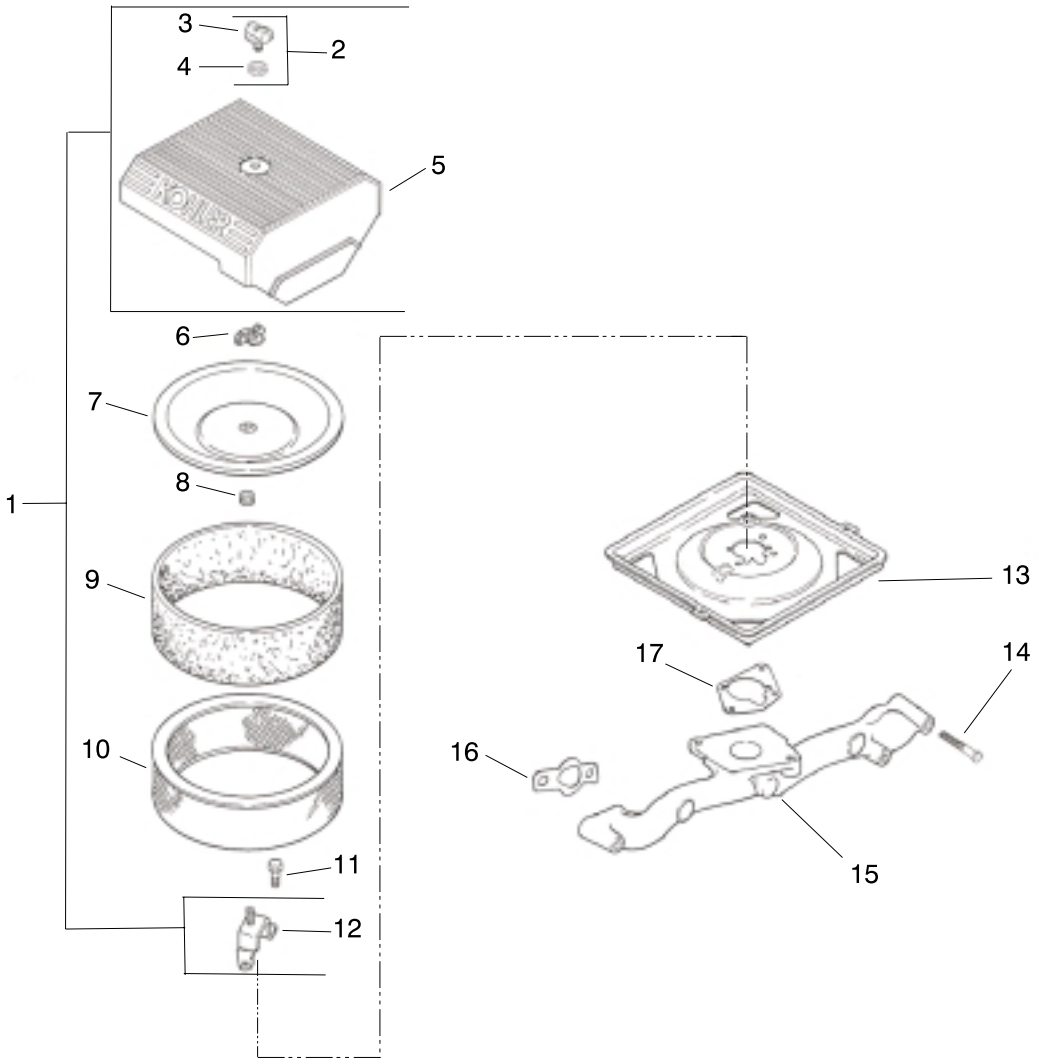

ENGINE KOHLER MODEL CH20S SPEC. NO. 64647

#	Part No.	Description	Qty
1	24 743 05-S	Air Cleaner Cover Kit (includes #2-5, 12)	1
2	54 755 01-S	Knob w/Seal Kit (includes #3, & 4)	1
3	25 341 03-S	Cover Knob	1
4	24 153 20-S	Air Cleaner Cover Knob Seal	1
5	24 096 67-S	Air Cleaner Cover	1
6	12 100 01-S	Wing Nut	1
7	24 096 01-S	Inner Air Cleaner Cover	1
8	24 032 03-S	Inner Air Cleaner Seal	1

#	Part No.	Description	Qty
9	24 083 02-S	Element Precleaner	1
10	47 083 03-S	Air Cleaner Element	1
11	M-639016-S	Hex Flange Screw	3
12	24 126 21-S	Air Cleaner Base Bracket	1
13	24 094 03-S	Air Cleaner Base	1
14	M-651055-S	Hex Flange Screw	4
15	24 164 14-S	Intake Manifold	1
16	24 041 01-S	Intake Manifold Gasket	2
17	24 041 06-S	Air Cleaner Base Gasket	1

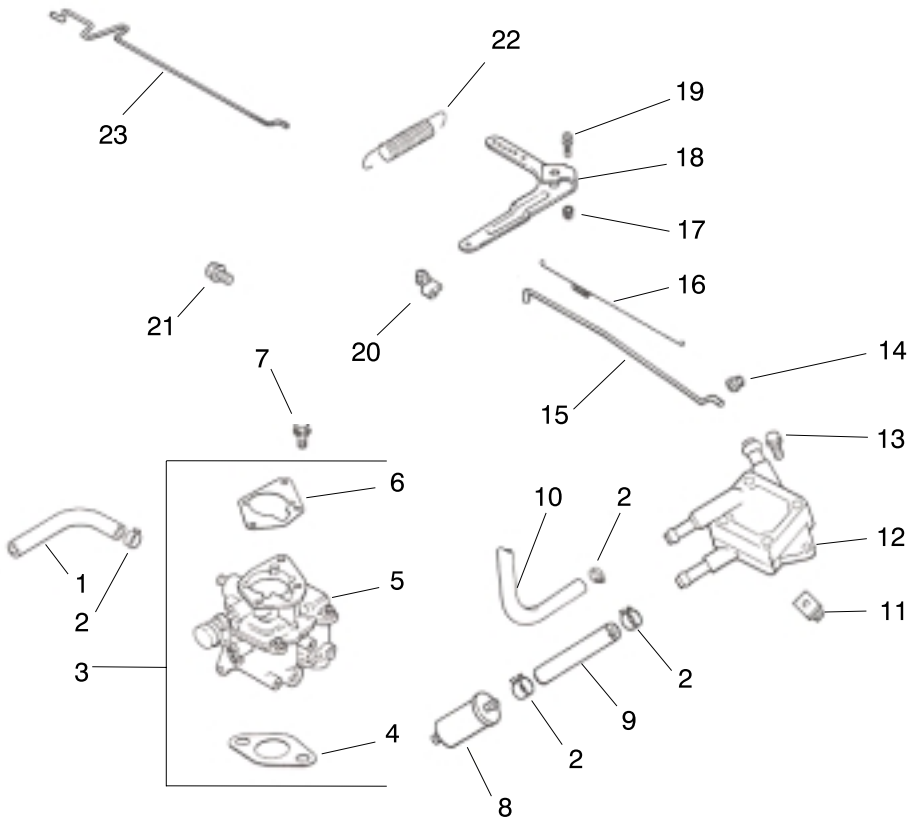

1752

ENGINE KOHLER MODEL CH20S SPEC. NO. 64647

#	Part No.	Description	Qty
1	25 353 10-S	Fuel 9" Line	1
2	X-426-9-S	Hose Clamp	6
3	24 853 33-S	Carburetor w/Gasket Kit (includes #4-6)	1
4	24 041 06-S	Air Cleaner Base Gasket	1
† 5	24 053 33	Carburetor ASM	1
6	24 041 17-S	Carburetor Gasket	1
7	M-651030-S	Hex Flange Screw	2
8	24 050 02-S	Fuel Filter	1
9	25 353 15-S	Fuel Line 3-1/2"	1
10	24 353 02-S	Fuel Line 15-1/2"	1
11	24 100 10-S	Plastic Nut	2
12	24 393 16-S	Fuel Pump	1
13	24 086 12-S	Hex Hd. Screw	2
14	25 158 08-S	Linkage Retaining Bushing	1

#	Part No.	Description	Qty
15	24 079 01-S	Throttle Linkage	1
16	24 089 01-S	Linkage Spring	1
17	M-641060-S	Hex Flange Nut	1
18	24 090 33-S	Governor Lever	1
19	24 211 03-S	Rd. Hd. Sq. Bolt	1
20	25 158 11-S	Linkage Retaining Bushing	1
21	M-645016-S	Hex Flange Screw	1
22	24 089 44-S	Governor Spring	1
23	24 079 02-S	Choke Linkage	1
*	24 757 01-S	Solenoid Repair Kit	1
*	24 757 02-S	Float Repair Kit	1
*	24 757 03-S	Carburetor Repair Kit	1
*	24 757 07-S	Choke Repair Kit	1
*	24 757 08-S	Accelerator Pump Seal Kit	1
*	24 757-09-S	Accelerator Pump Diaphragm Kit	1

* Not Illustrated

† For information only not available separately.

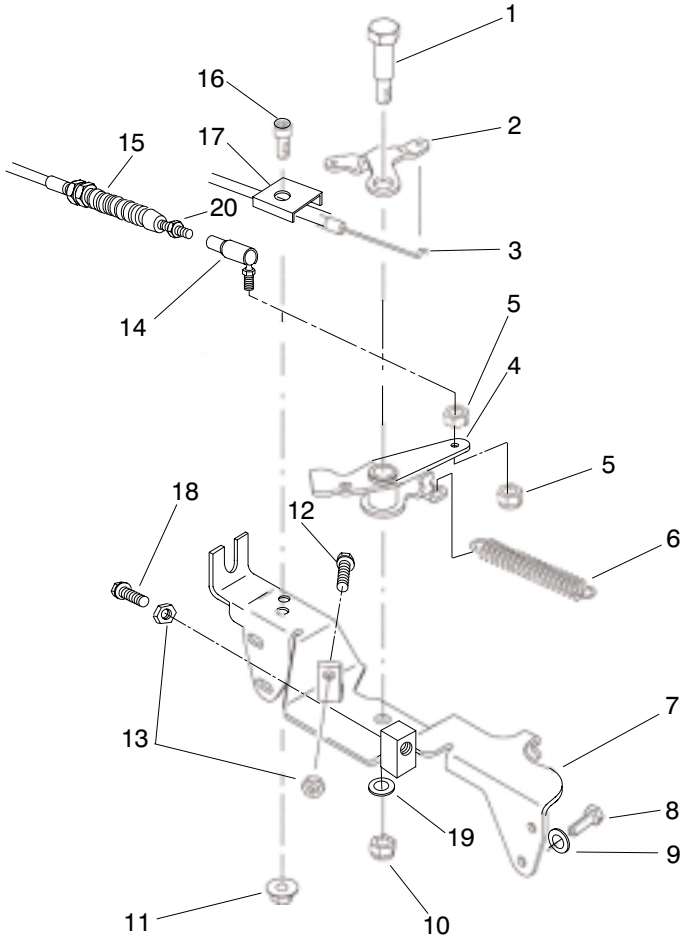

1717

THROTTLE LINKAGE ASSEMBLY

#	Part No.	Description	Qty
1	7-0030	Shoulder Bolt	1
2	87-7790	Choke Lever	1
3	41697	Choke Cable	1
4	100-8558	Throttle Lever	1
5	3220-1	Jam Nut	2
6	67-1450	Extension Spring	1
7	100-8557	Throttle Bracket	1
8	33103-016	HH Screw	4
9	48-8020	Lock Washer	4
10	3296-29	Lock Nut	1

#	Part No.	Description	Qty
11	3296-2	Hex Nut	1
12	329-6	HH Cap Screw	1
13	3220-1	Jam Nut	2
14	100-8559	Ball Joint	1
15	100-8383	Accelerator Cable	1
16	3290-134	HH Screw	1
17	92-0477	Clamp	1
18	329-9	Bolt	1
19	356303	Washer- Spacer	1
20	3219-14	Nut	1

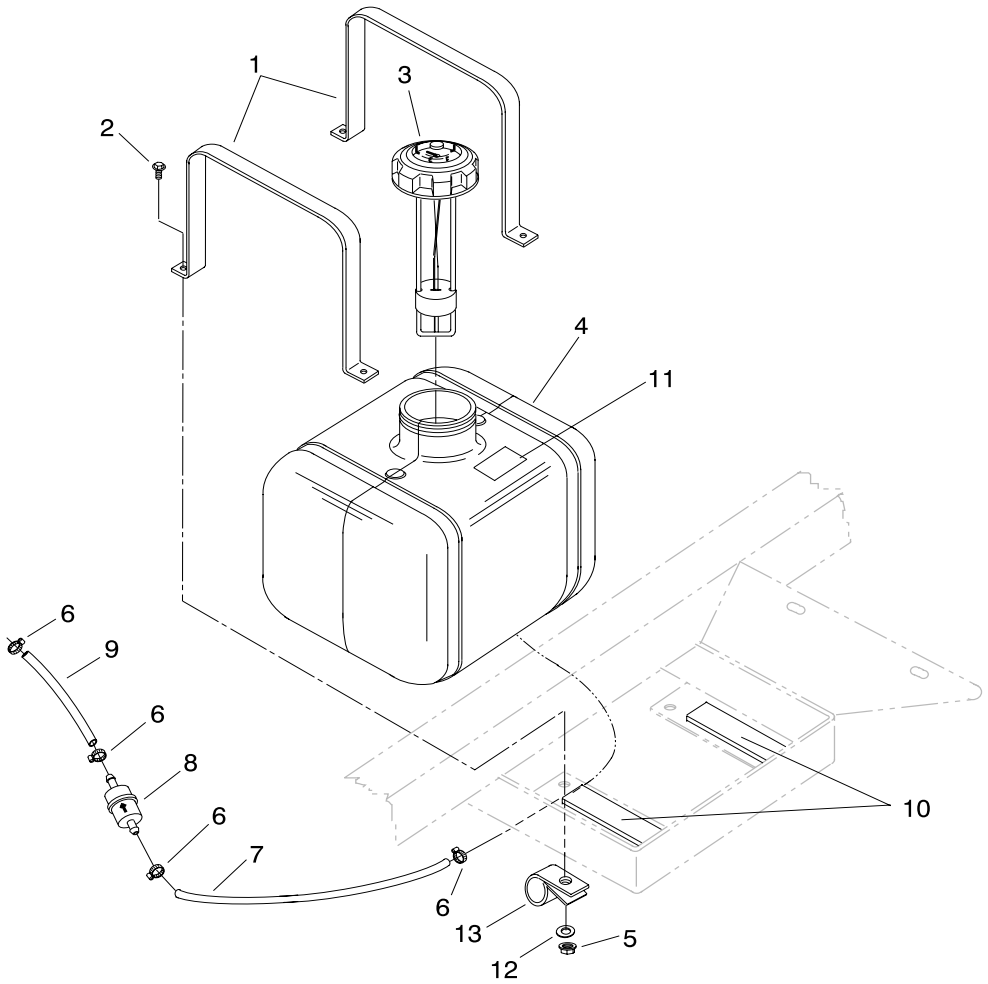

FUEL TANK ASM

#	Part No.	Description	Qty
1	431366	Fuel Tank Strap	2
2	321-6	Cap Screw	4
3	100-8386	Fuel Cap & Gauge	1
4	100-7005	Fuel Tank w/Decal	1
5	32128-33	Nut	4
6	97406	Hose Clamp	4
7	100-8387	Fuel Line	1

#	Part No.	Description	Qty
8	24 050 02S	Fuel Filter	1
9	25 353 15S	Fuel Line (3 1/2" Lg) (Kohler)	1
10	100-8524	Foam Strip	2
11	100-6775	Decal- Unlead Fuel Only	1
12	3256-23	Flat Washer	1
13	2412-82	R-Clamp (for Suction Hose)	1
*	2412-81	R-Clamp (Gas Line)	3
*	3234-4	Cap Screw	1
*	32128-33	Nut	1
*	3256-23	Flat Washer	1

* Not Illustrated

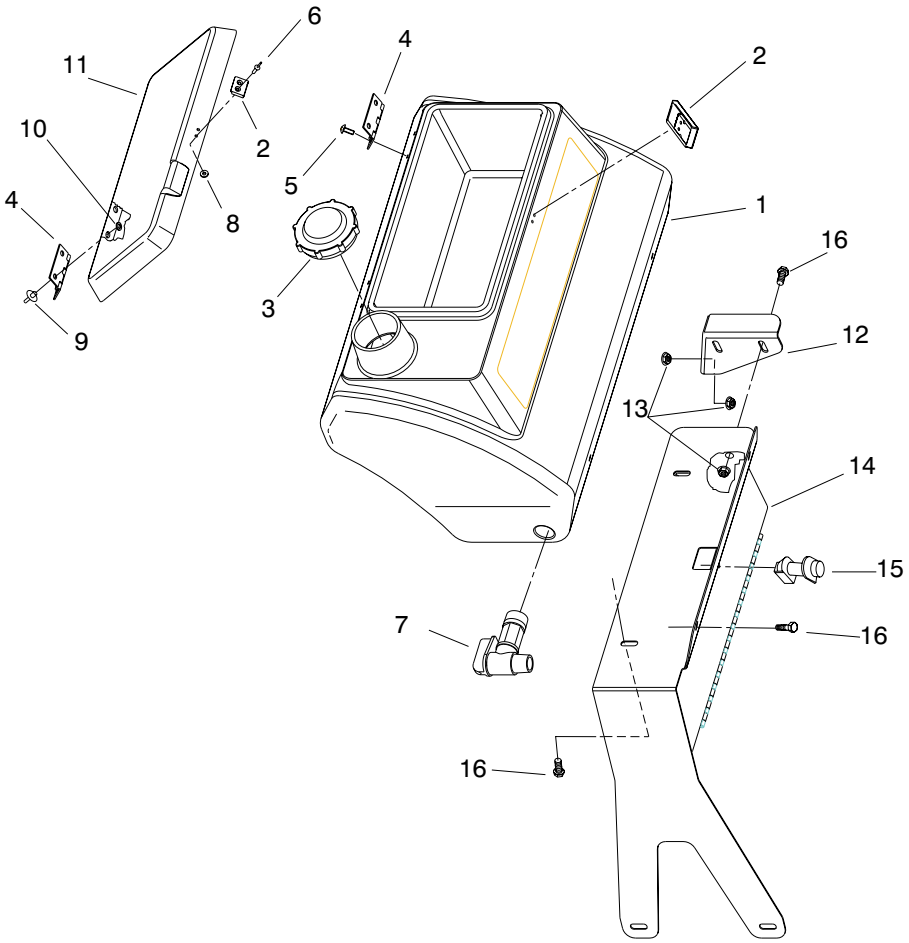

1874

FRESH WATER TANK

#	Part No.	Description	Qty
1	100-8438	Fresh Water Tank	1
†2	100-7009	Latch	1
3	100-7008	Cap	1
†4	100-7010	Hinge	2
†5	100-7064	Screw	4
†6	100-7063	Rivet	4
†7	100-7011	90° Spigot	1
†8	100-7066	Washer	2

#	Part No.	Description	Qty
†9	100-7062	Rivet	4
†10	100-7065	Washer	4
†11	100-8397	Tank Cover	1
12	100-8401	Tank Mount Plate	1
13	32128-20	Nut	4
14	104-8912	Tank Bracket	1
15	104-8914	Latch	1
16	3234-28	Bolt	6

† Included with Item #1, 100-8438 Fresh Water Tank ASM.

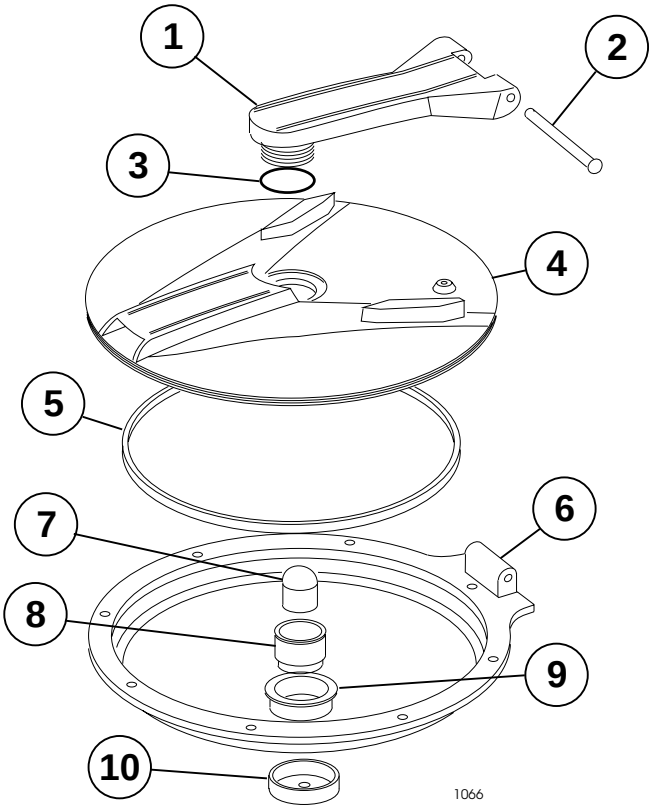

TANK LID ASM 94-7088

#	Part No.	Description	Qty
1	94-7205	Swivel Arm	1
2	94-7213	Pivot Arm	1
3	94-7206	O-Ring EPDM	1
4	94-7207	Spray Tank Lid	1
5	94-7208	Gasket EPDM	1
*	42323	Filler Basket (f/w Tank Lid ASM)	1

#	Part No.	Description	Qty
6	94-7211	Tank Lid Ring	1
*	93-0833	Aluminum Pop Rivet	8
7	94-7209	Breather Plunger	1
8	94-7210	Breather Body	1
9	94-7212	Breather Nut	1
10	94-7214	Breather Cap	1

* Not Illustrated

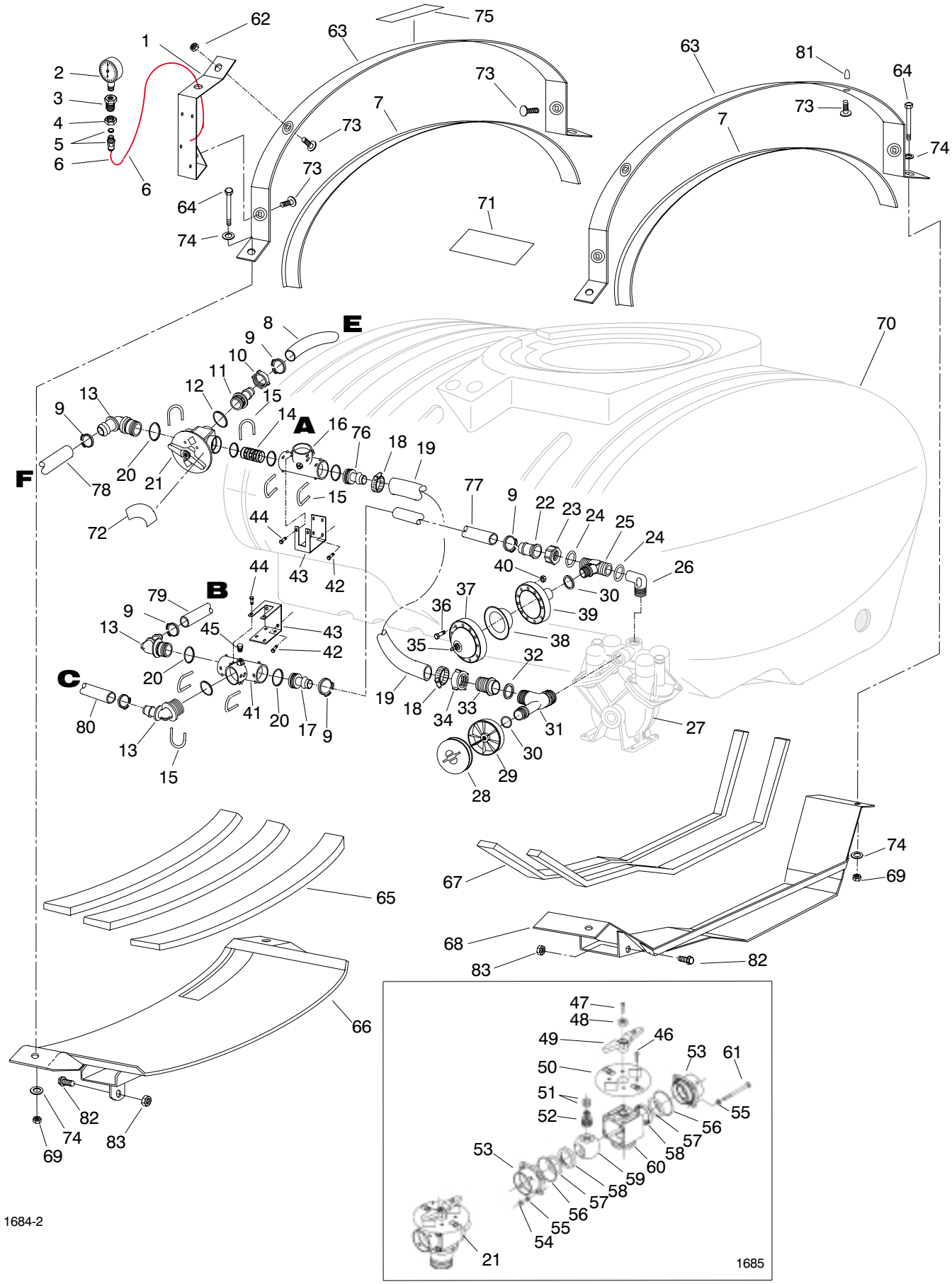
1684-2
1685
A
B
C
E
F

TANK/SADDLE ASM

#	Part No.	Description	Qty
1	100-8479	Tee Bracket ASM	1
2	100-8576	Pressure Gauge	1
3	100-8665	Reducer	1
4	100-8666	Nut	1
5	100-8667	Coupler	1
6	104-8782	4mm Tube, Length= 10.5"	1
7	99-0753	Bulk Strap Insulator	2
8	104-8915	Hose, 1", Length= 93"	1
9	99-0782	Hose Clamp	6
10	100-8669	Nut	1
11	100-6898	Hosebarb, 90°	1
12	100-8671	O-Ring	1
13	100-8672	Hosebarb	3
14	100-6703	Connector	1
15	100-8635	Fork, S67	7
16	100-6704	Tee	1
17	100-8676	Hosebarb	1
18	41327	Hose Clamp	2
19	100-8484	Suction Hose, 1-1/2", L= 50"	1
20	100-8637	O-Ring	7
21	100-8673	Valve Agitation ASM	1
22	99-0781	Hosebarb	1
23	99-0769	Nut	1
24	100-6655	Gasket	2
25	100-8699	Tee	1
26	100-8698	Elbow	1
27	100-8295	Pump	1
28	99-0899	Suction Damper Diaphragm	1
29	100-6600	Suction Damper Housing	1
30	100-6656	O-Ring	2
31	100-8681	Tee	1
32	100-8680	Seal	1
33	100-8679	Hosebarb	1
34	100-8678	Nut	1
35	99-0895	Air Valve	1
36	48-7730	Bolt	12
37	99-0896	Upper Pressure Damper	1
38	99-0897	Pressure Damper Diaphragm	1
39	99-0898	Lower Pressure Damper	1
40	48-7930	Nut	12
41	100-8675	Tee	1
42	3234-4	Cap Screw	4

#	Part No.	Description	Qty
43	100-8478	Tee Bracket	2
44	32144-32	Screw	8
45	100-8674	Coupler	1
46	100-8689	Plastic Screw	4
47	100-8688	Plastic Screw	1
48	100-8682	Black Button	1
49	100-8683	Valve Handle	1
50	100-8684	Disc	1
51	100-8685	O-Ring	2
52	100-8686	Valve Spindle	1
53	100-8687	Valve End Cover	2
54	48-7900	Lock Nut	4
55	100-8692	Washer	8
56	100-8693	O-Ring	2
57	100-8694	O-Ring	2
58	100-8695	Ball Seat	2
59	100-8697	Valve Ball - Three-Way	1
60	100-8696	Valve Housing - Three-Way	1
61	33113-080	Bolt	4
62	32128-20	Lock Nut	2
63	100-7006	Tank Band w/Decal	2
64	100-8528	Cap Screw	4
65	100-8574	Foam RR Saddle 29.5"	3
66	100-8569	Saddle, Rear ASM	1
67	100-8573	Foam Front Saddle 42"	2
68	100-8565	Saddle, Front ASM	1
69	32128-21	Lock Nut	4
70	104-8965	Tank, 160 gallon	1
71	93-0688	Decal	1
72	100-8577	Decal	1
73	3230-1	Carriage Bolt	4
74	3256-4	Washer	8
75	87-0570	Decal	1
76	100-6782	Hosebarb	1
77	104-8712	Hose, 1", Length= 42"	1
78	104-8908	Hose, 1", Length=11"	1
79	104-8710	Hose, 1", Length=40"	1
80	104-8915	Hose, 1", Length=93"	1
81	42452	Protedtive Cap	1
82	3234-32	Cap Screw - Flange	4
83	32128-49	Locknut - Flange	4

ROUTING LEGEND

A - TOP SUCTION (Pages 50 & 52).

B - PRESSURE RELIEF VALVE (Pages 50 & 52).

C - CONTROL SUPPLY (Pages 50 & 57).

D - BOOM BYPASS (Pages 52 & 54).

E - CONTROL BYPASS (Pages 50 & 57).

F - AGITATON SUPPLY (Pages 50 & 52).

G - MIDDLE AGITATION JET (Page 52).

H - FRONT AGITATION JET (Page 52).

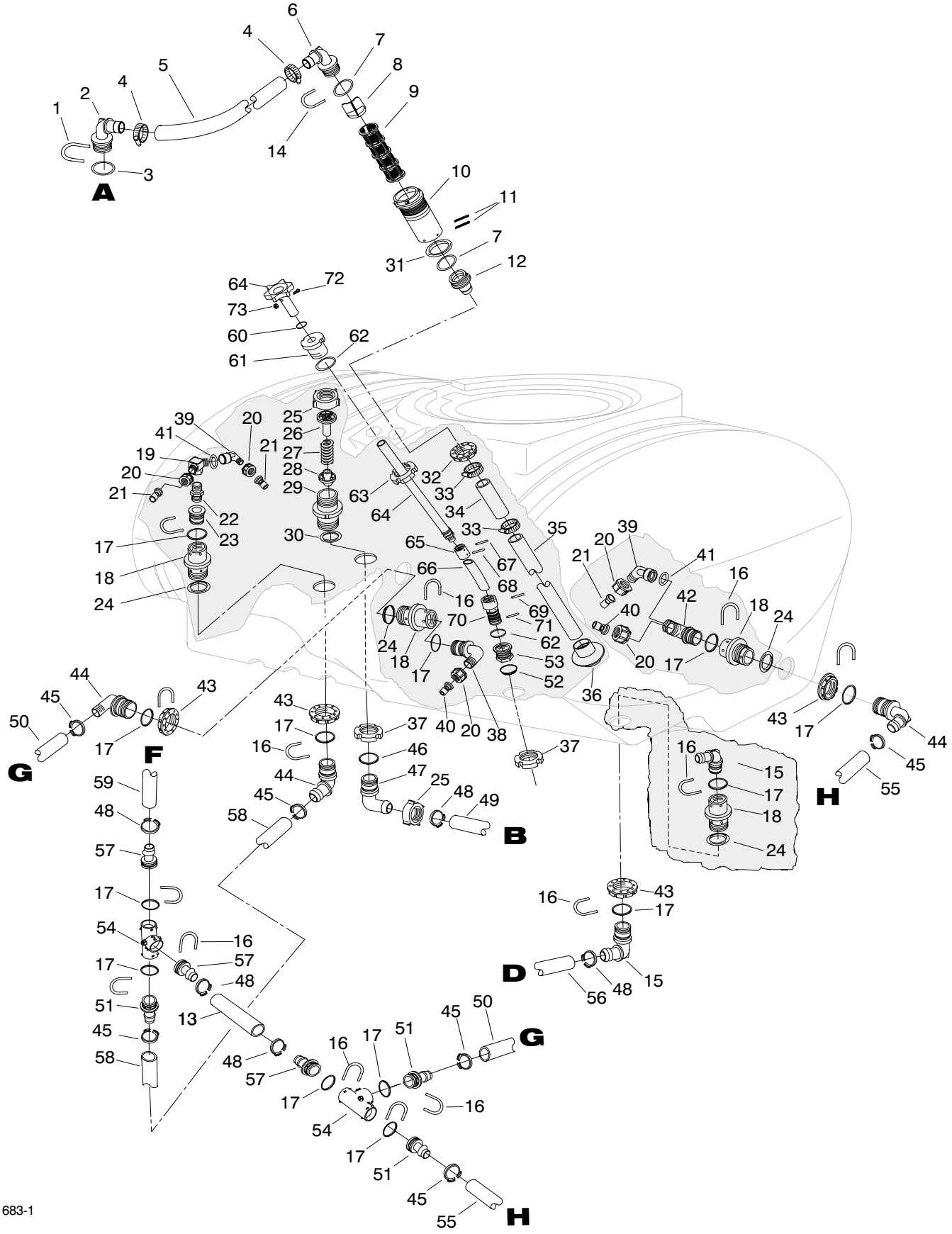
A
B
D
F
G
H
1683-1

SPRAY SYSTEM

#	Part No.	Description	Qty
1	100-8635	Fork - S67	1
2	100-8638	Hosebarb	1
3	100-8637	O-Ring	1
4	41327	Hose Clamp	2
5	100-8483	Suction Hose, 1 1/2" L= 25"	1
6	100-8639	Hosebarb, Red	1
7	100-8640	O-Ring	2
8	100-8641	Screen Vane	1
9	100-8642	Screen Suction 50 Mesh, Blue	AR
*	100-6992	Screen Suction 80 Mesh, Red	AR
*	100-6991	Screen Suction 30 Mesh, Green	AR
10	100-8643	Filter Housing	1
11	100-8644	Expansion Pin	2
12	100-8645	Hosebarb	1
13	104-9039	Hose, 1", Length= 24"	1
14	100-8636	Fork	1
15	100-6720	Hosebarb	2
16	100-6708	Fork, S53	8
17	100-6712	O-Ring/Gasket	8
18	100-6709	Bulkhead	4
19	100-6723	Tee	1
20	99-0766	Nut	5
21	100-6705	Nozzle	3
22	100-6722	Nipple	1
23	100-6721	Adapter	1
24	100-6710	Bulkhead Gasket	4
25	100-8678	Nut	2
26	100-6724	Valve Seat	1
27	100-6725	Spring	1
28	100-6726	Valve Cone	1
29	100-6727	Valve Relief Housing	1
30	100-6652	Gasket	1
31	100-8646	Bulkhead Gasket	1
32	100-8647	Nut	1
33	26392	Hose Clamp	2
34	100-8649	Suction Hose, 2", L= 5"	1
35	100-6990	Suction Tube	1
36	100-6714	Suction Tube Foot	1
37	99-0761	Ringnut	2

#	Part No.	Description	Qty
38	100-6715	Elbow	1
39	99-0768	Elbow	1
40	100-6706	Nozzle	2
41	100-6653	O-Ring	1
42	100-6707	Tee	1
43	100-6713	Nut	4
44	100-6711	Hosebarb	3
45	99-0755	Hose Clamp	6
46	100-6646	O-Ring	1
47	100-6716	Hosebarb	1
48	99-0782	Hose Clamp	5
49	104-8710	Hose, 1", Length= 40"	1
50	104-8704	Hose, 3/4", Length= 17”	1
51	100-6717	Hosebarb	2
52	100-8659	Bulkhead Gasket	2
53	100-8664	O-Ring	4
54	104-9041	Tee	2
55	104-8706	Hose, 3/4"Length = 44"	1
56	104-9044	Hose, 1" Length = 65"	1
57	100-6816	Hosebarb	3
58	104-9043	Hose, 3/4" Length = 26"	1
59	104-8908	Hose, 1", Length= 11"	1
60	104-9045	O-Ring	1
61	104-9048	Bulkhead	1
62	100-6658	O-Ring	2
63	99-0758	Ringnut	1
64	100-8655	Tube-Drain (f/w Handgrip & Item 72-73)	1
65	100-8657	Connector	1
66	100-8658	Tube, Flex	1
67	100-8656	Pin	1
68	100-8660	Pin	1
69	100-8661	Pin	1
70	100-8662	Drain Screw	1
71	100-8663	Pin	1
72	104-9046	Bolt	1
73	104-9047	Locknut	1
			1

ROUTING LEGEND

A - TOP SUCTION (Pages 50 & 52).

B - PRESSURE RELIEF VALVE (Pages 50 & 52).

C - CONTROL SUPPLY (Pages 50 & 57).

D - BOOM BYPASS (Pages 52 & 54).

E - CONTROL BYPASS (Pages 50 & 57).

F - AGITATON SUPPLY (Pages 50 & 52).

G - MIDDLE AGITATION JET (Page 52).

H - FRONT AGITATION JET (Page 52).

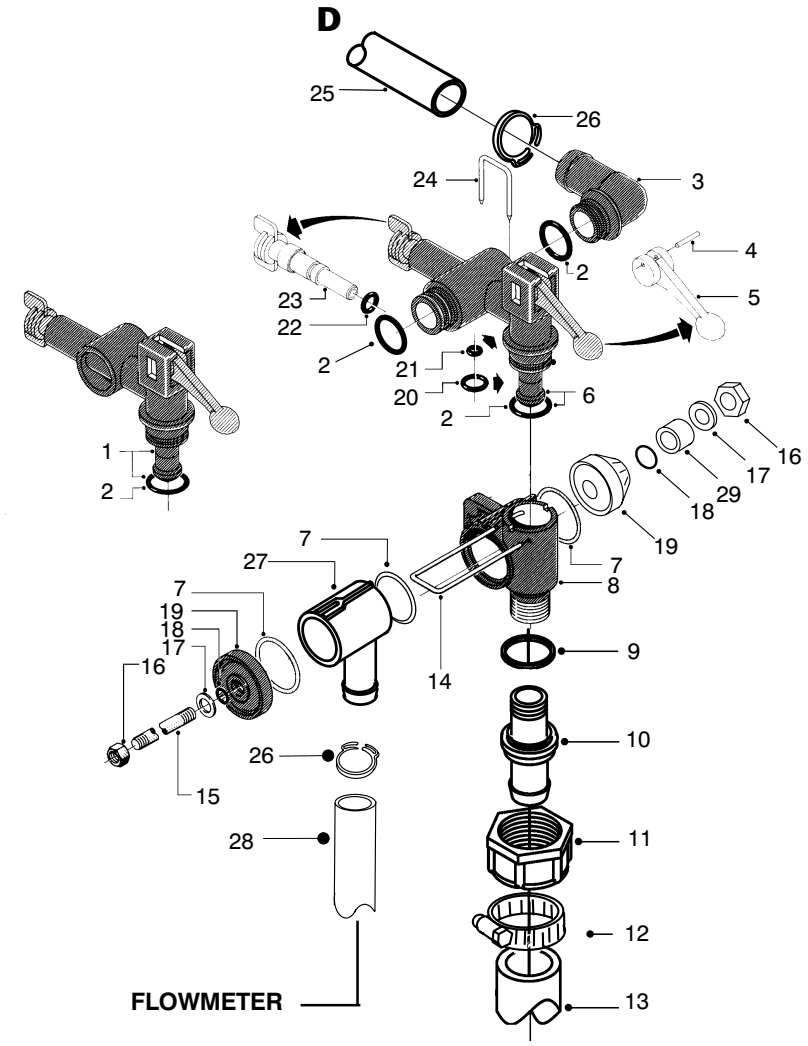

1822-1200-1

DISTRIBUTION VALVE

#	Part No.	Description	Qty
1	100-6765	Valve ASM, Blind Connection (Incl 2,4,5,22,23)	1
2	100-6882	O-Ring	6
3	100-6893	Elbow	1
4	100-6766	Pin	3
5	100-6835	Distribution Handle	3
6	100-6767	Valve ASM, Thru Connection (Incl 2,4,5,22,23)	2
7	100-6892	O-Ring	5
8	100-6759	Housing	3
9	100-6645	Seal	3
10	100-6986	Hosebarb	3
11	99-0850	Nut	3
12	92-0045	Hose Clamp	3
13	104-8853	Hose, 3/4", Length = 144", R.H. & L.H. Boom Feed	2
*	31188	Hose, 3/4", Length = 117", Center Boom Feed	1

#	Part No.	Description	Qty
14	100-6758	Fork	1
15	104-8916	Stud	1
16	100-6894	Hex Nut	2
17	100-6634	Washer	2
18	100-6887	O-Ring	2
19	100-6913	Cover	2
20	100-6770	O-Ring	6
21	100-6878	O-Ring	9
22	100-6641	O-Ring	3
23	100-6769	Screw, Adjusting	3
24	100-6885	Fork	3
25	104-9044	Hose, 1", Length = 65"	1
26	99-0782	Hose Clamp	2
27	100-6908	Tee	1
28	104-8905	Hose, 1", Length = 3"	1
29	100-6897	Bushing	1

*Not Illustrated

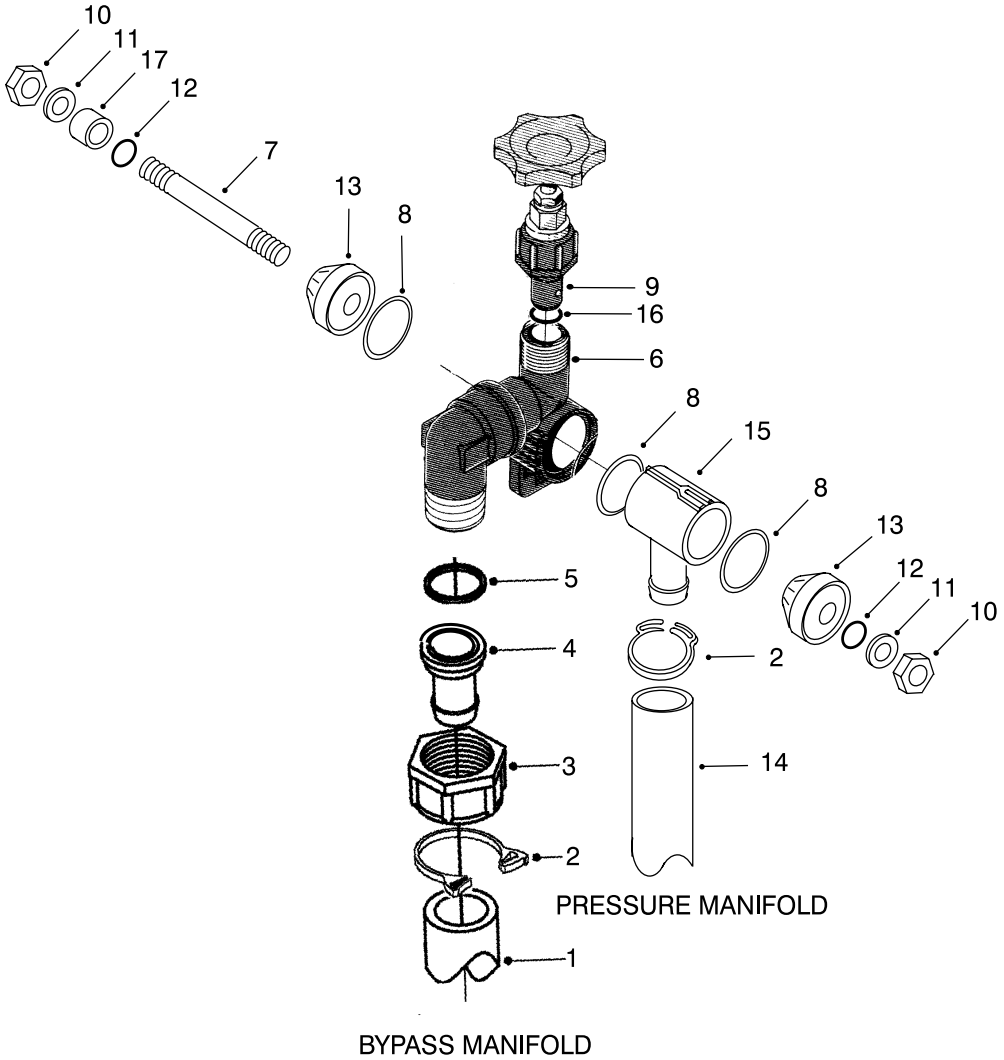

1933-1

PRESSURE REGULATOR

#	Part No.	Description	Qty
1	104-8909	Hose, 1" Length = 8.5"	1
2	99-0782	Hose Clamp	2
3	99-0769	Nut	1
4	99-0781	Hosebarb	1
5	100-6655	Seal	1
6	104-8919	Housing, Pressure Control	1
7	104-8917	Threaded Rod	1
8	100-6892	O-Ring	3
9	100-6762	Pressure Regulator	1

#	Part No.	Description	Qty
10	100-6894	Hex Nut, M8	2
11	100-6634	Flat Washer	2
12	100-6887	O-Ring	2
13	100-6913	Cap	2
14	104-8908	Hose, 1", Length = 11"	1
15	100-6908	T-Piece	1
16	100-6644	O-Ring	1
17	100-6897	Bushing	1

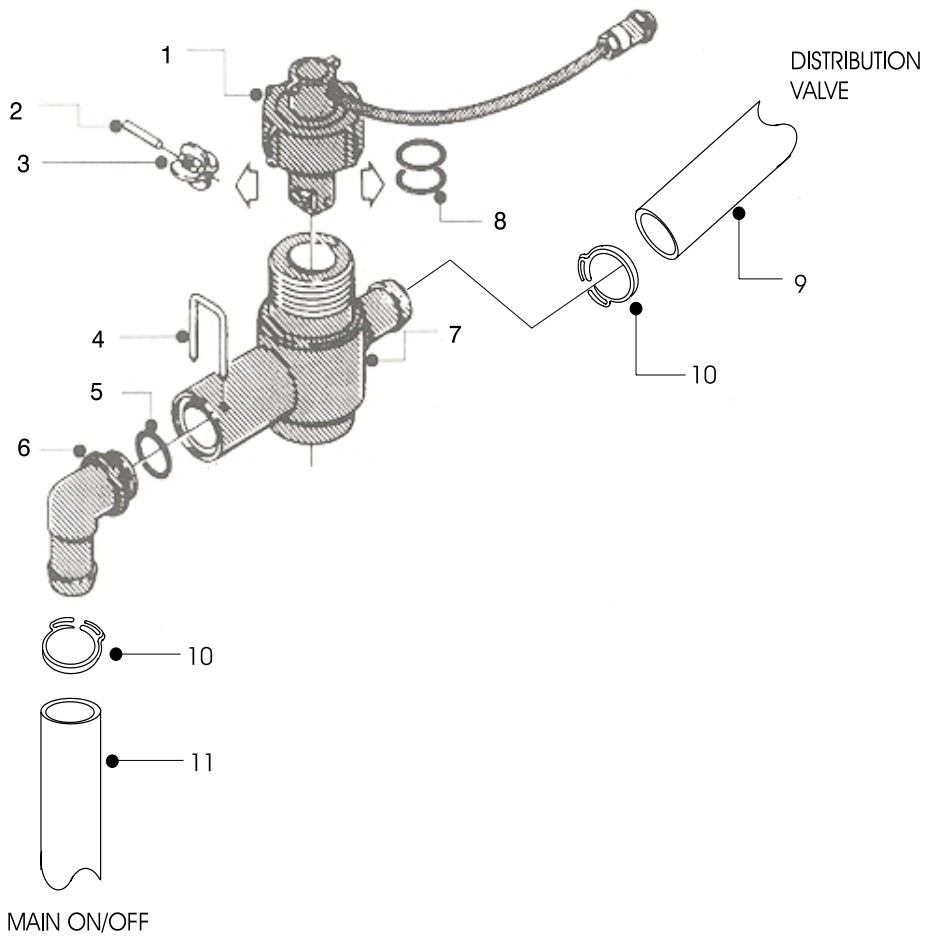

1939

FLOWMETER

#	Part No.	Description	Qty
1	100-6900	Flow Sensor	1
2	100-6906	Rotor Shaft	1
3	100-6919	Flowmeter Rotor	1
4	100-6885	Fork	1
5	100-6882	O-Ring	1
6	100-6893	Hosebarb, 90°	1

#	Part No.	Description	Qty
7	104-8901	Flowmeter Housing	1
8	100-8653	O-Ring	2
9	104-8905	Hose, 1", Length = 3"	1
10	99-0782	Hose Clamp	2
11	104-8906	Hose, 1", Length = 19.5"	1

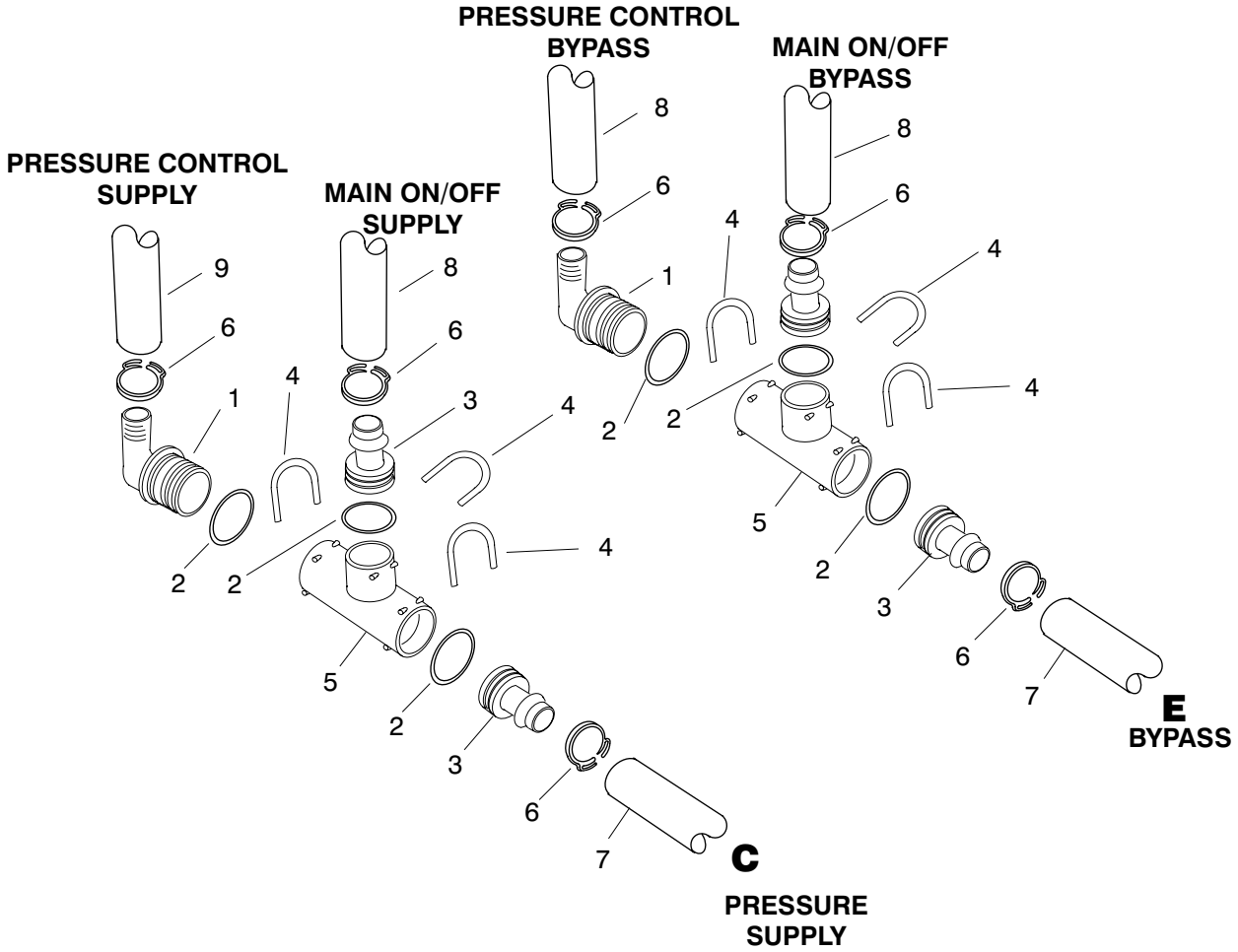

1940-1

MANIFOLD

#	Part No.	Description	Qty
1	100-6720	Hose Barb	2
2	100-6712	O-Ring	6
3	100-6719	Hose Barb	4
4	100-6708	Fork	6
5	104-9041	T-Piece	2

#	Part No.	Description	Qty
6	99-0782	Hose Clamp	6
7	104-8915	Hose, 1", Length = 93"	2
8	104-8909	Hose, 1", Length = 8.5"	3
9	104-8908	Hose, 1", Length = 11"	1

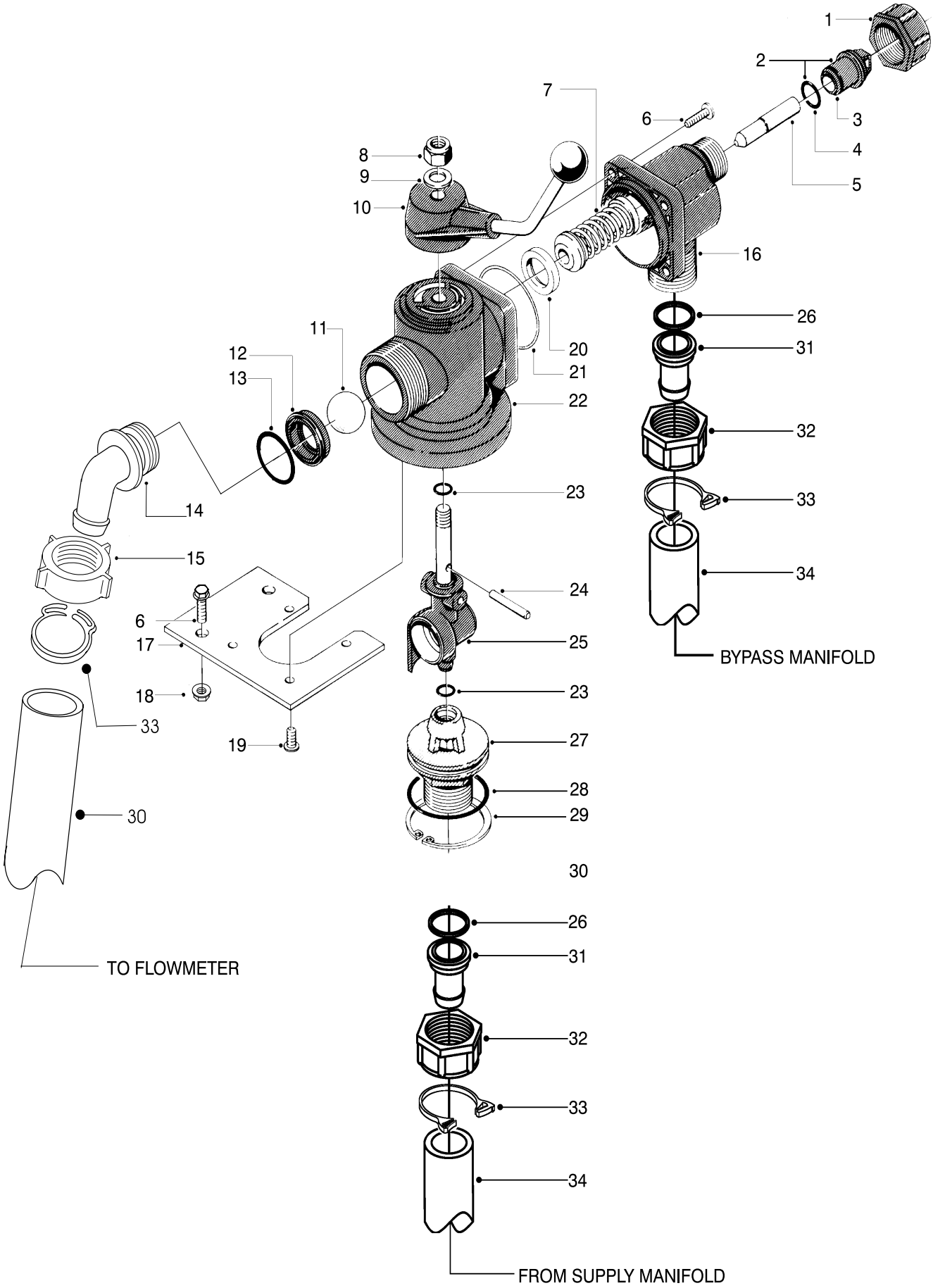
1
2
3
4
5
6
7
8
9
10
11
12
13
14
15
16
17
18
19
20
21
22
23
24
25
26
27
28
29
30
31
32
33
34
BYPASS MANIFOLD
TO FLOWMETER
FROM SUPPLY MANIFOLD

MAIN ON/OFF

#	Part No.	Description	Qty
1	99-0850	Nut	1
2	99-0844	Plug ASM	1
3	100-6941	Fitting	1
4	100-6645	O-Ring	1
5	100-6942	Pin	1
6	3234-5	Flange Screw	2
7	100-7003	Valve ASM	1
8	48-9520	Hex Nut, Metric	1
9	99-0863	Washer	1
10	100-6843	Handle	1
11	100-7000	Ball	1
12	100-6999	Seat	1
13	100-6646	O-Ring	1
14	100-6716	Hosebarb, 110°	1
15	100-8678	Nut	1
16	100-6943	Pressure Valve Housing	1
17	100-6997	Plate	1

#	Part No.	Description	Qty
18	32128-20	Nut	2
19	100-6916	Plastic Screw	4
20	100-6945	Seat	1
21	100-6947	O-Ring	1
22	100-6949	Housing	1
23	100-6641	O-Ring	2
24	100-8656	Roll Pin	1
25	100-6950	Stem	1
26	100-6655	Seal	2
27	100-6951	Adapter	1
28	100-6993	O-Ring	1
29	100-6994	Snap Ring	1
30	104-8906	Hose, 1", Length = 19.5"	1
31	99-0781	Hosebarb	2
32	99-0769	Nut	2
33	99-0782	Hose Clamp	3
34	104-8909	Hose, 1" Length = 8.5"	1

NOTES:

PUMP 104-9170

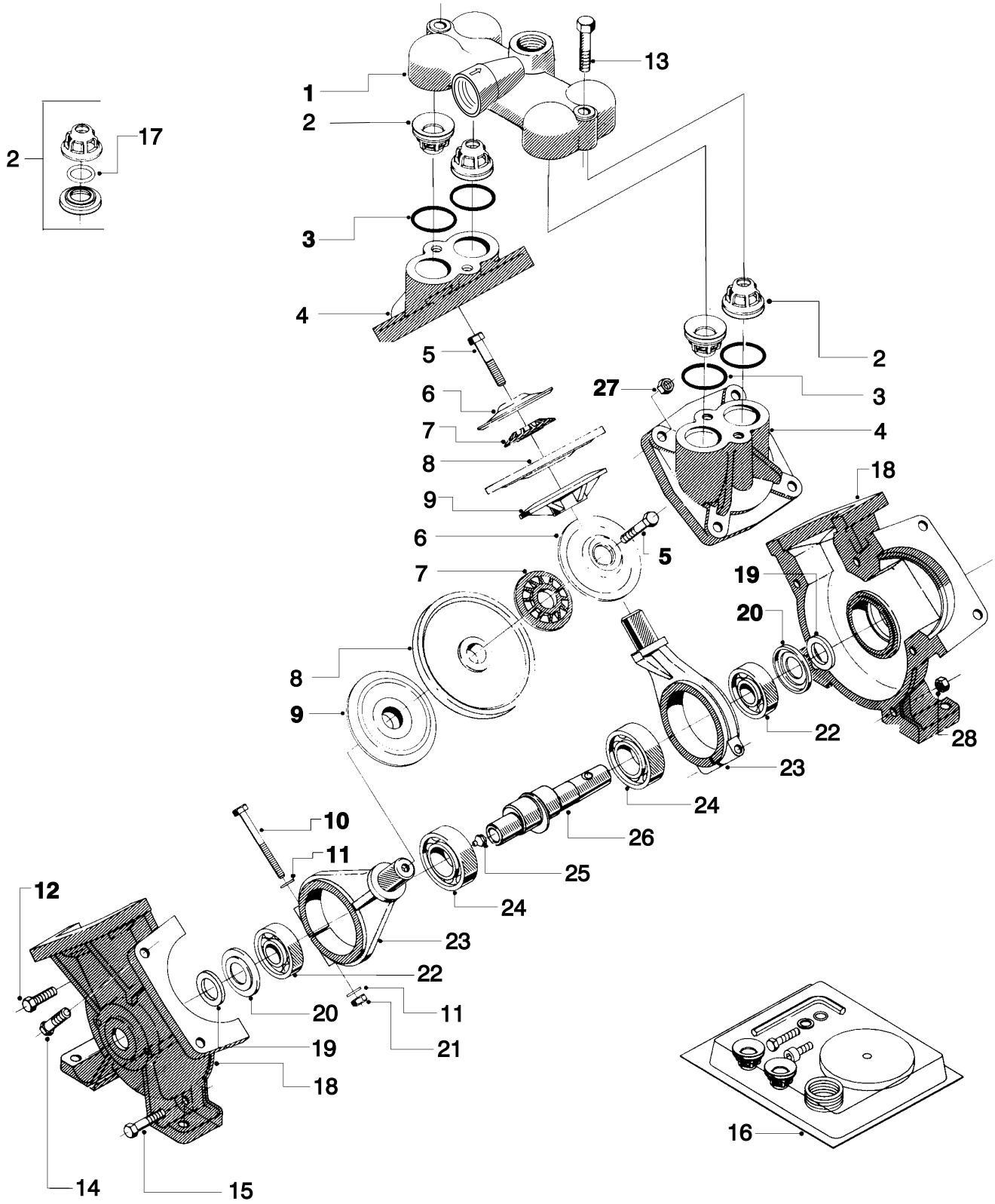

1673-1

PUMP 104-9170

#	Part No.	Description	Qty
1	100-8306	Valve Chamber	1
2	100-8307 **	Valve	4
3	100-6652 **	O-Ring	4
4	100-8309	Diaphragm cover	2
5	100-8310 **	Bolt Hex 7/16" X 2-1/4"	2
6	100-8311 **	Washer	2
7	100-8312 **	Nylon Washer	2
8	100-8313 **	Diaphragm	2
9	100-8314	Diaphragm Back Disc	2
10	100-8315	Bolt Hex M8 X 85	2
11	100-8316	Washer Lock	4
12	100-8317	Bolt Hex 3/8" X 30MM, Whit.	3
13	100-8335	Bolt Hex 1/2" X 55MM, Whit.	2
14	100-8319	Bolt Hex M12X50	8
15	100-8320	Bolt Hex 3/8" X 55MM, Whit.	2

#	Part No.	Description	Qty
16	100-8337	Pump Kit (Parts included shown with **)	1
17	100-8336	O-Ring Poly	4
18	100-8323	Pump Casing	2
19	99-0868	Seal Felt	2
20	100-8325	Dust Plate	2
21	100-8326	Nut Hex M8 Black	2
22	100-8327	Bearing Ball	2
23	100-8328	Conn. Rod.	2
24	100-8329	Bearing Ball	2
25	99-0873	Grease Nipple 1/8" H TR	1
26	104-9052	Crank Shaft, Keyed	1
27	100-8334	Nut Hex M12 Black	8
28	100-8333	Nut Hex 3/8", Whitworth Thr.	5

Whit. = Whitworth Threads
** Parts included in Pump Kit 100-8337

NOTES:

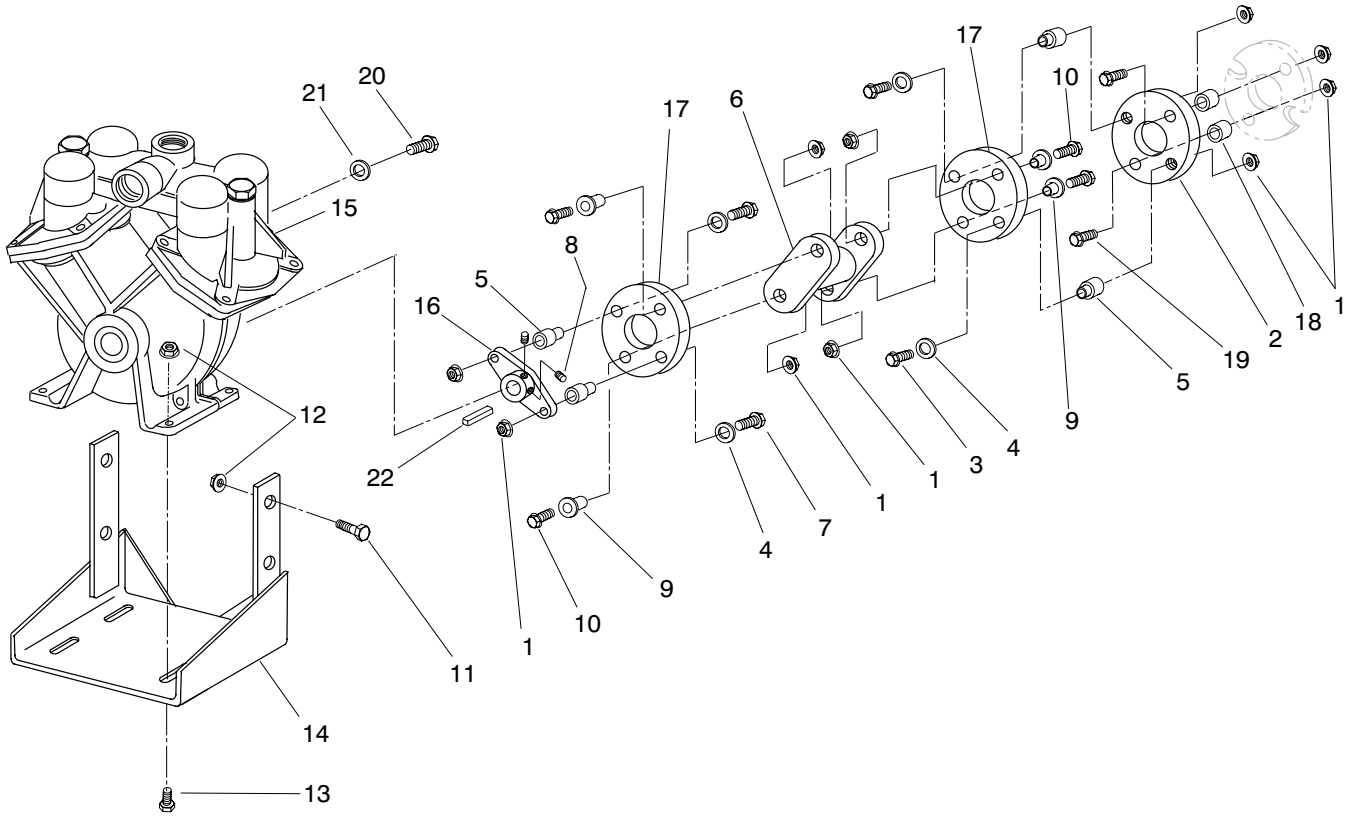

1713

PUMP DRIVE

#	Part No.	Description	Qty
1	3296-29	NY Lock Nut	10
2	100-8435	Cluch Adapter	1
3	322-9	HH Bolt	2
4	3256-3	Flat Washer	4
5	27-6590	Spacer Coupling	4
6	80-6950	Drive Coupler - WA	1
7	322-7	HH Bolt	2
8	3241-5	Set Screw	2
9	104-8774	Spacer Coupling	4
10	322-5	HH Bolt	4
11	3234-11	HH Flange Bolt	8

#	Part No.	Description	Qty
12	32128-43	Flange Nut	8
13	3234-24	HH Flange Bolt	4
14	100-8477	Pump Mount Bracket ASM	1
15	104-9170	Pump Kit- Hardi	1
16	93-2589	Pump Hub	1
17	100-8471	Coupling- Rubber	2
18	104-8763	Spacer	2
19	322-10	HH Bolt	2
20	100-6665	Lock Washer	2
21	3253-21	Bolt (Whitworth Threads)	2
22	314233	Key, Square	1

SPRAY SYSTEM ELECTRICAL DIAGRAM

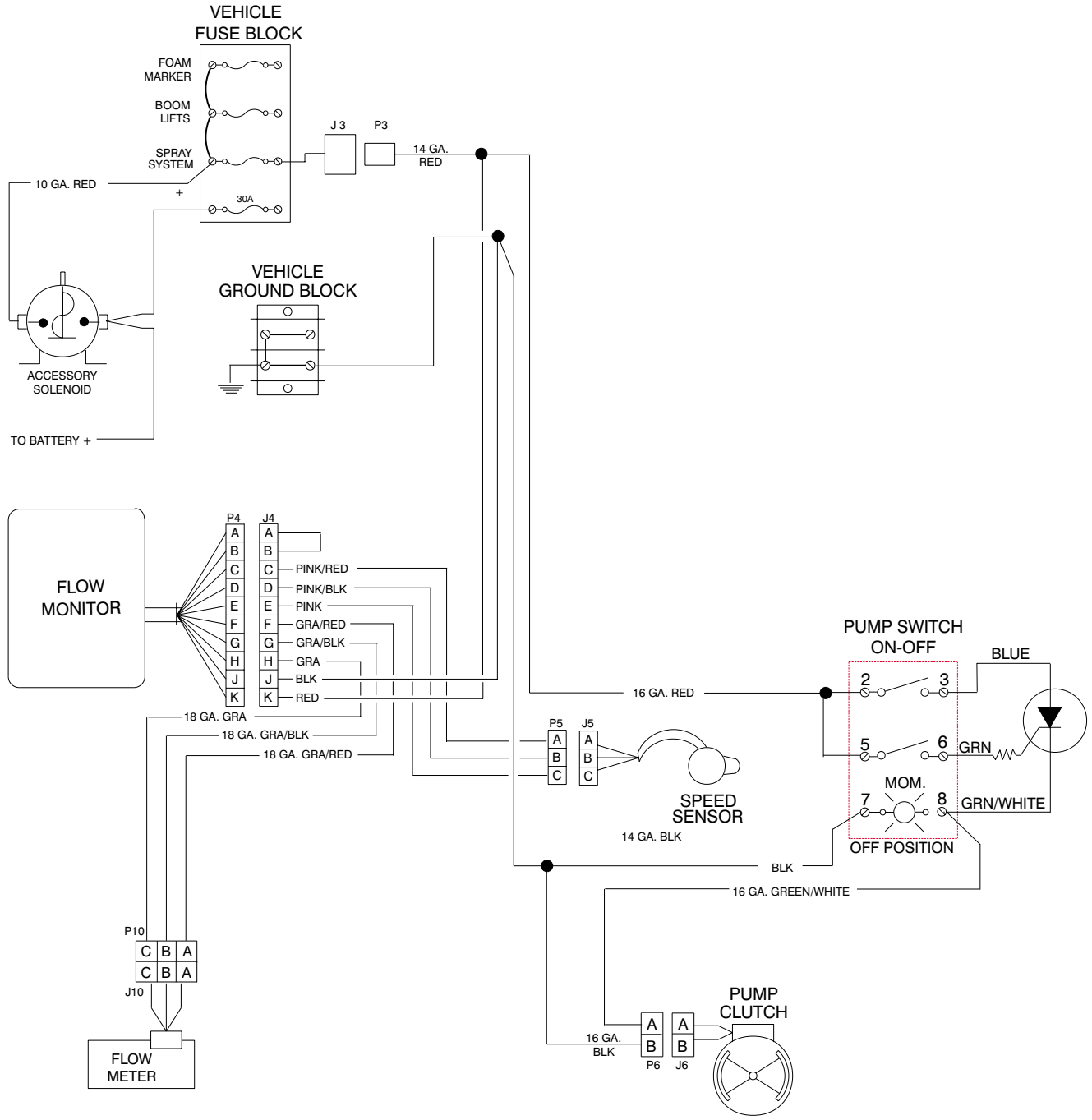

1919CE

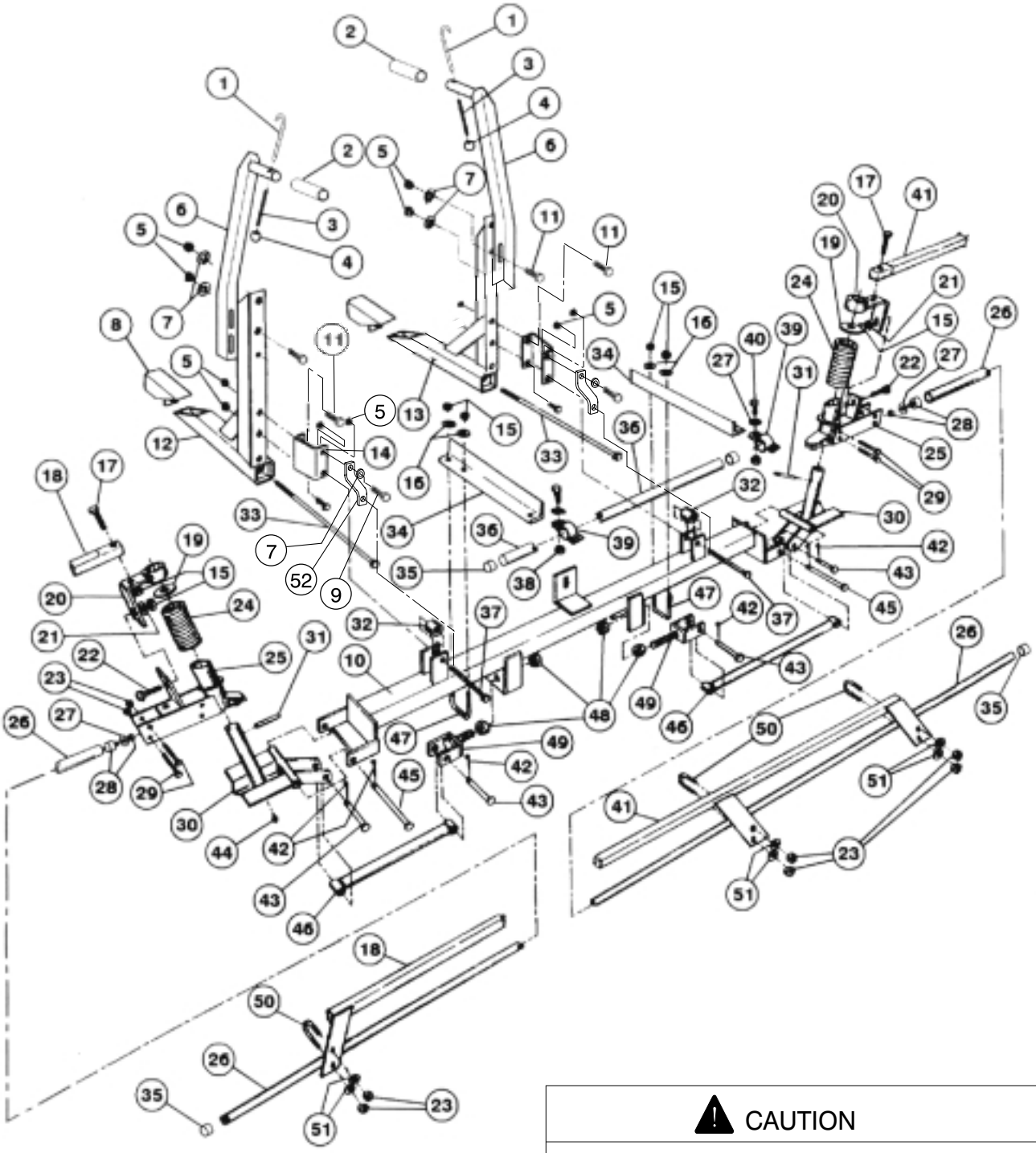

1936-1200

⚠ CAUTION

THE TWO SPRINGS (REF # 24) ARE UNDER APPROX. 150 LBS. OF PRESSURE. BE VERY CAUTIOUS WHEN REMOVING THE SPRING PINS (REF #31) FOR REMOVAL OF THE SPRINGS.

IMPORTANT! THE TWO BOLTS (REF #33) MUST BE TORQUED TO 50 FT. LBS.

SPRAY BOOM

#	Part No.	Description	Qty
1	92-8562	Hold-in Hook	2
2	92-8561	Hold-in Hose	2
3	92-8563	Hold-in Spring	2
4	92-8564	Hold-in Knob	2
5	32153-5	Hex Nut, 1/2" UNC	8
6	92-8534 **	Boom Hold-in ASM	2
7	3256-6	Flat Washer 1/2"	6
8	42223	Tube Wedge ASM	2
9	325-5	1/2" x 1-1/4 HHCS	2
10	42227	Main Frame Tube	1
11	3234-32 **	HHCS, 1/2 x 1-1/4 UNC	8
12	42217	Boom Mount ASM L.H.	1
13	42222	Boom Mount ASM R.H.	1
14	100-8431 **	Boom Mounting Brkt.	2
15	3217-6	Hex Nut, 5/16 UNC	14
16	3256-3	Flat Washer, 5/16	6
17	322-7	HHCS, 5/16 x 1-1/2 UNC	2
18	42711	Boom Support ASM L.H.	1
19	3256-62 †	Flat Washer 1"	2
20	42707	Support Bracket ASM	2
21	3256-23	Flat Washer, 5/16"	6
22	3230-1	Carriage Bolt 5/16 x 3/4 UNC	2
23	32146-17 †	Lock Nut 1/4 UNC	10
24	42196 †	Compression Spring	2
25	42706 †	Breakaway Pivot ASM	2
26	42282	Extension Boom Pipe ASM	2

† - Denotes parts available in an assembled unit. Order #42840 Breakaway ASM

#	Part No.	Description	Qty
27	3256-4	Flat Washer 3/8	4
28	92-3749	Freeze Plug	2
29	321-10	HHCS 1/4 x 1-3/4 UNC	8
30	42243 †	Hinge ASM	2
31	32121-78 †	Spring Pin 1/4 x 2	2
32	42257	Spacer Tube 1"	2
33	42199	HHCS 1/2 x 18 UNC	2
34	42234	Center Boom Angle	2
35	92-8420	Boom Cap	4
36	40493	Center Boom Pipe	1
37	325-34 **	HHCS 1/2 x 2-3/4 UNC G8	2
38	32153-2	Lock Nut 3/8 UNC	2
39	40494	Clamp ASM	2
40	323-6	HHCS 3/8 x 1 UNC	2
41	42710	Boom Support ASM R.H.	1
42	3272-11	Cotter Pin 1/8 x 1	6
43	42195	Clevis 1/2 x 2"	2
44	361011 †	Grease Fitting	2
45	42194	Clevis 1/2 x 4-1/2	2
46	42240	Strut ASM	2
47	301950	U-Bolt 5/16 UNC	2
48	3217-11	Hex Nut 5/8	4
49	42237	Adjustable Clevis ASM	2
50	92-0010	U-Bolt	4
51	3256-2	Flat Washer 1/4	8
52	104-8761	Boom Support Strap	2

* Not Illustrated

** In Parts Carton ASM strapped to Spray Unit.

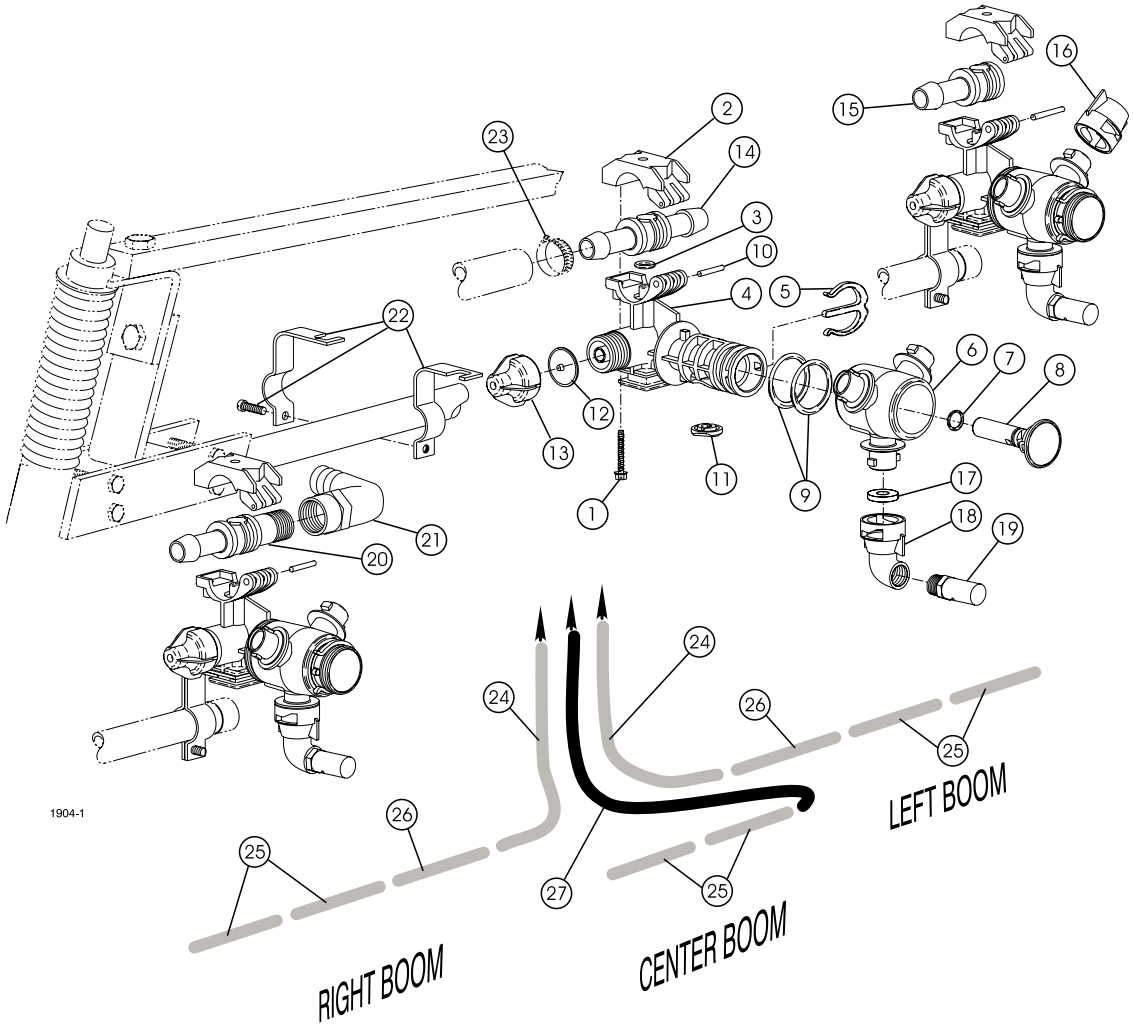

TURRET BODIES

Ref.	Part No.	Description	Qty.
*	104-8789	Turret Body - Double Barb (Incl. Ref. #'s 1-14)	7
*	104-8787	Turret Body - Single Barb (Incl. Ref. #'s 1-13 & 15)	3
*	104-8790	Turret Body - Barb x 1/2 NPT (Incl. Ref. #'s 1-13 & 20)	1
•1	99-0811	Screw	1
•2	**	Upper Clamp	1
•†3	95-9191	O-Ring	1
•4	**	Split-Eyelet Body	1
5	95-9197	E-Clip	1
6	104-8775	Turret	1
†7	95-9198	O-Ring	1
8	95-9200	Plug	1
†9	95-9199	O-Ring	2
•10	99-0814	Pivot Pin, 303 S.S.	1
†11	99-0813	Seal	1
†12	41003	Diaphragm	1
13	95-9193	End Cap Assembly	1
14	95-9202	Double Hose Barb	1

† Denotes parts in Seal Kit # 104-8777. *Not Illustrated
** Not Serviced Separately.

Ref.	Part No.	Description	Qty.
15	95-9201	Single Hose Barb	1
16	95-9187	Nozzle Dust Cap (Incl. Ref. # 17)	22
17	40998	Seat Gasket	33
18	95-9186	Nozzle Cap, 90° (Incl. # 17)	11
19	95-9188	TTJ10 Turbo TurfJet (Std.)	11
	95-9221	TTJ2 Turbo TurfJet (Optional)	11
	95-9222	TTJ4 Turbo TurfJet (Optional)	11
	95-9223	TTJ5 Turbo TurfJet (Optional)	11
	95-9224	TTJ6 Turbo TurfJet (Optional)	11
	95-9225	TTJ8 Turbo TurfJet (Optional)	11
	95-9226	TTJ15 Turbo TurfJet (Optional)	11
20	95-9203	Hose Barb x 1/2" NPT	1
21	95-9314	90° Elbow, 1/2" FPT x 3/4" H.B.	1
22	95-9185	Turret Body Clamp	11
23	92-0045	Hose Clamp, 3/4" Hose	22
24	104-8853	Boom Hose, 3/4 x 144"	2
25	40506	Jumper Hose, 3/4 x 19"	6
26	95-2229	Jumper Hose, 3/4 x 21"	2
27	31188	Boom Hose, 3/4 x 117"	1

• Denotes Parts in Body Sub ASM #104-8776.

NOTES:

TORO®

Helping you put quality into play.®