Form No. 3445-370 Rev B

TORO®

Count on it.

Parts Catalog

Dethatching Unit

Greensmaster® 3300/3400 Series TriFlex® Traction Unit

Model No. 04720—Serial No. 408000000 and Up

Register at www.Toro.com.
Original Instructions (EN)

CE

3445-370 B

Ordering Replacement Parts

To order replacement parts, please supply the part number, the quantity, and the description of each part desired.

Understanding Reference Numbers

Each identified part in an illustration has a reference number. The reference number for a part also appears in the parts list, along with other information about the part.

This catalog uses two special reference number formats, one to indicate parts in a service assembly and another to indicate the quantity of a given part in an illustration.

Service Assembly Reference Numbers

Parts in service assemblies have reference numbers in the form a:b. The a represents the reference number of the entire service assembly and the b represents a sequential number unique to each part within the service assembly.

For example, a wheel assembly might be identified by reference number 6, the tire by 6:1, the valve by 6:2, and the wheel by 6:3. When you order the assembly identified by reference number 6, you receive all parts identified by reference numbers 6:1,6:2, and 6:3. However, you may also order any part individually. Reference numbers of this type appear in illustration and in parts lists.

Reference Numbers Indicating Quantity

In an illustration, if a reference number indicates more than one part, the reference number has the form nX y. The n represents the quantity of the part, the X is the multiplication symbol, and the y represents the reference number.

For example, in an illustration, the reference number 2X 37 means that two of the parts identified by reference number 37 are indicated.

Contents

Frame Assembly 4
Seal, Bearing and Spring Assembly 5
Roller Assembly 6
Rear Full Smooth Roller Kit Assembly No. 140-5560 7
Housing Assembly 8
Dethatcher Reel and Drive Assembly 9
Attachments and Accessories 10

© 2022—The Toro® Company
8111 Lyndale Avenue South
Bloomington, MN 55420

Contact us at www.Toro.com.
Printed in the USA.
All Rights Reserved

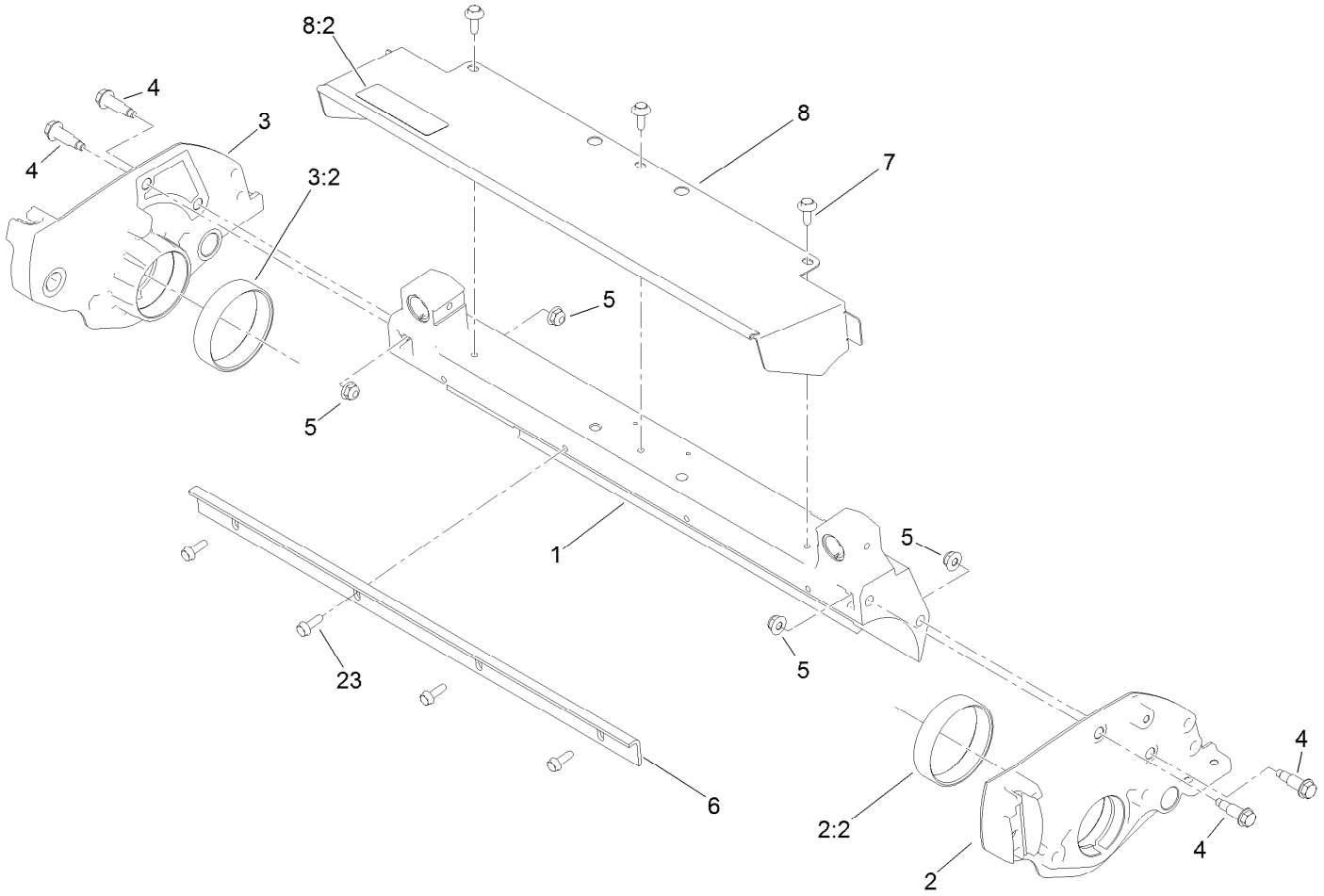

Frame Assembly

Ref.	*Part Number*	*Qty.*	*Description*
1	119-9303	1	Crossmember
2	119-4005	1	LH Sideplate ASM
2:2	117-6619	1	Bushing
3	119-4007	1	RH Sideplate ASM
3:2	117-6619	1	Bushing
4	115-7042	4	Bolt-Shoulder, Flange
5	119-4041	4	Nut-HF
6	115-3303-03	1	Bar-Cutoff
7	119-4012	3	Screw-HWHTF
8	119-4095	1	Grass Shield ASM
8:2	137-9706	1	Decal-Warning
23	131-6150	4	Screw-HWHTF

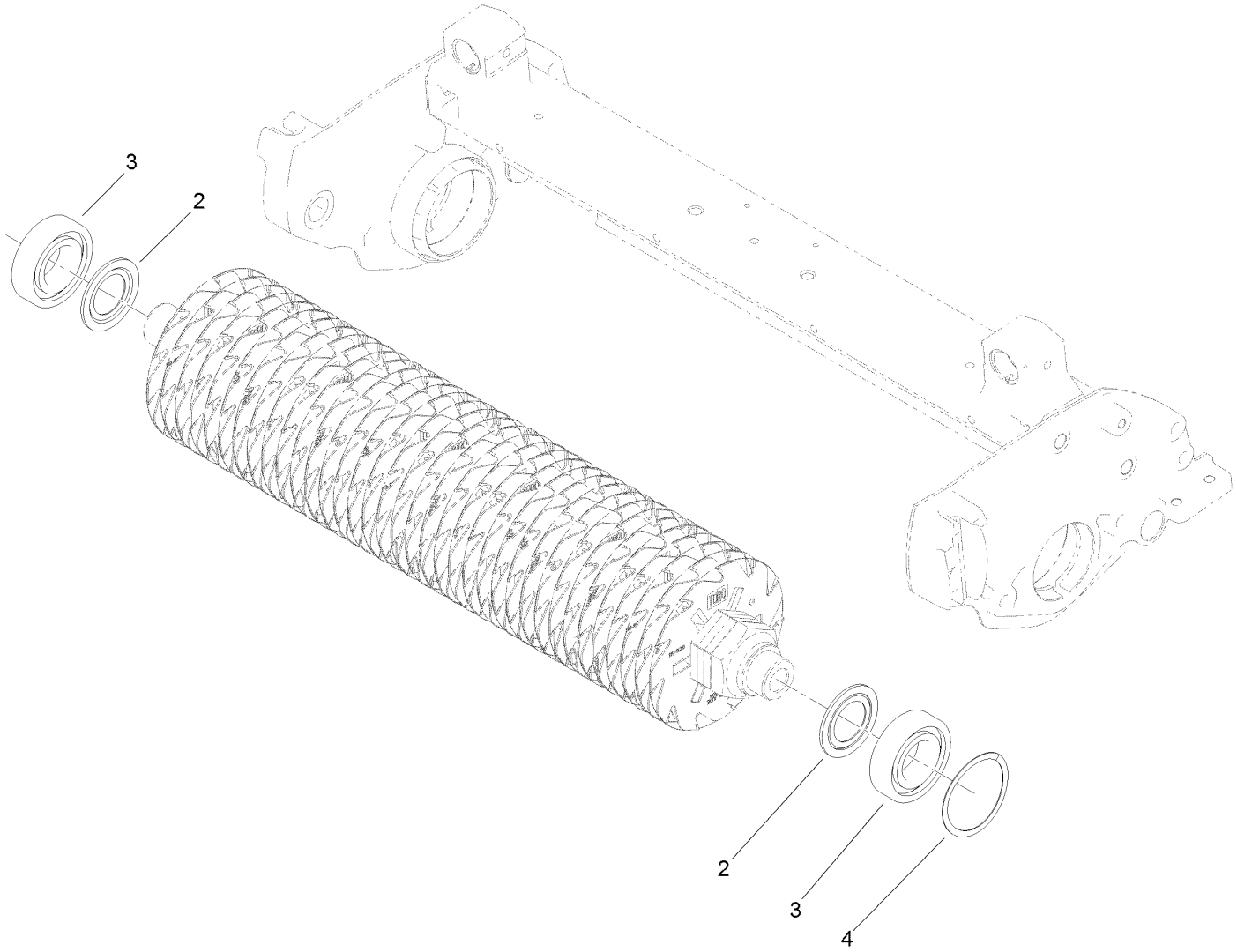

Seal, Bearing and Spring Assembly

Ref.	*Part Number*	*Qty.*	*Description*
2	115-3299	2	Seal-Flocked
3	140-5510	2	Bearing-Sealed, Stainless
4	115-5258	1	Spring-Wire, Flat

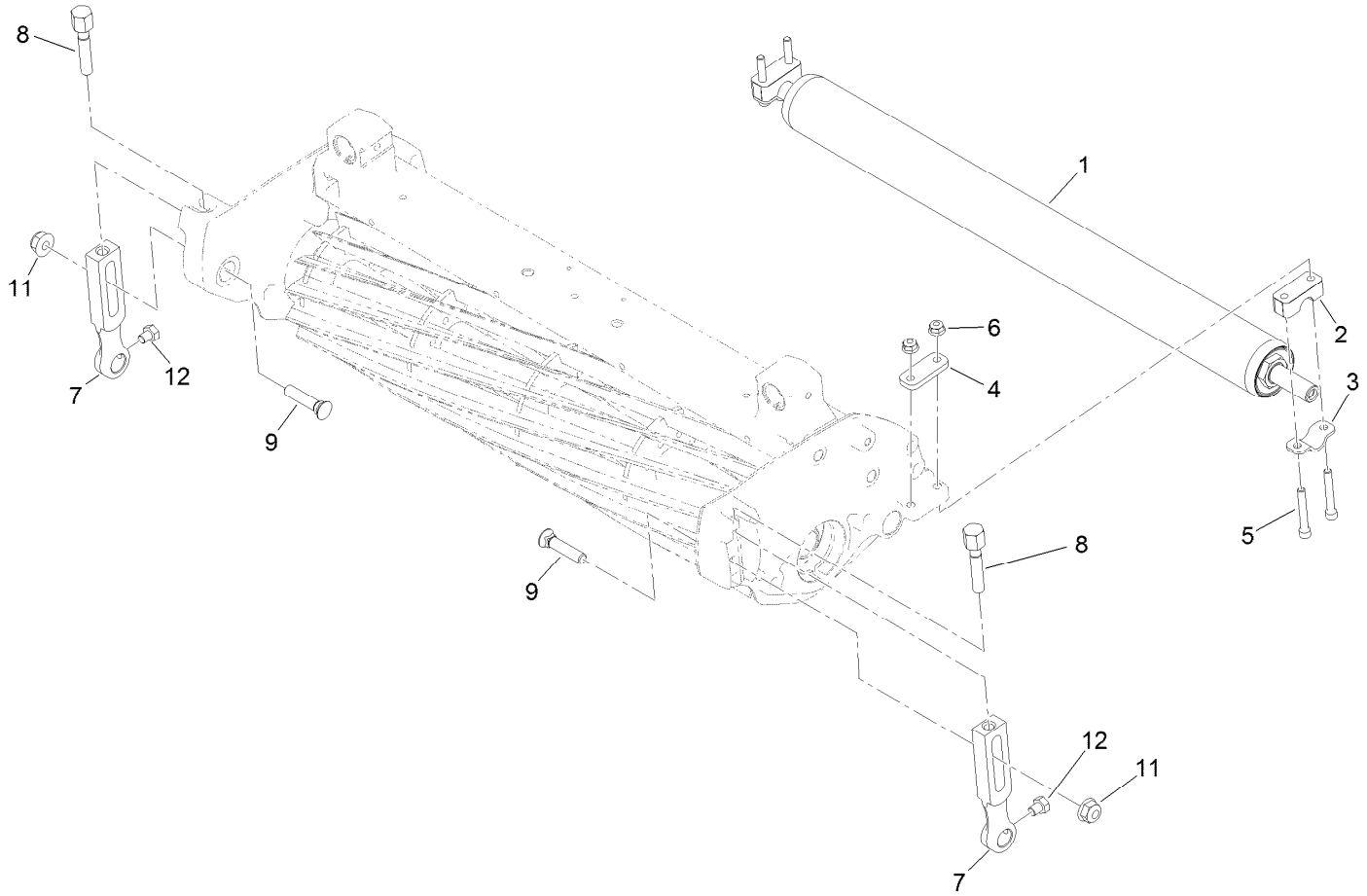

Roller Assembly

Ref.	Part Number	Qty.	Description
1	140-5560	1	Full Rear Roller(2.0In DIA)(21In)
2	119-4166	2	Spacer-Height, Roller
3	119-4157	2	Retainer-Shaft
4	119-4165	2	Shim-Height, Roller
5	119-4035	4	Screw-HSH
6	119-4040	4	Nut-HF, NI
7	115-7041	2	Arm-HOC
8	110-7352	2	Screw-HOC
9	99-3773	2	Bolt-Plow
11	133-7570	2	Nut-Flange, NI
12	119-4067	2	Screw-HH

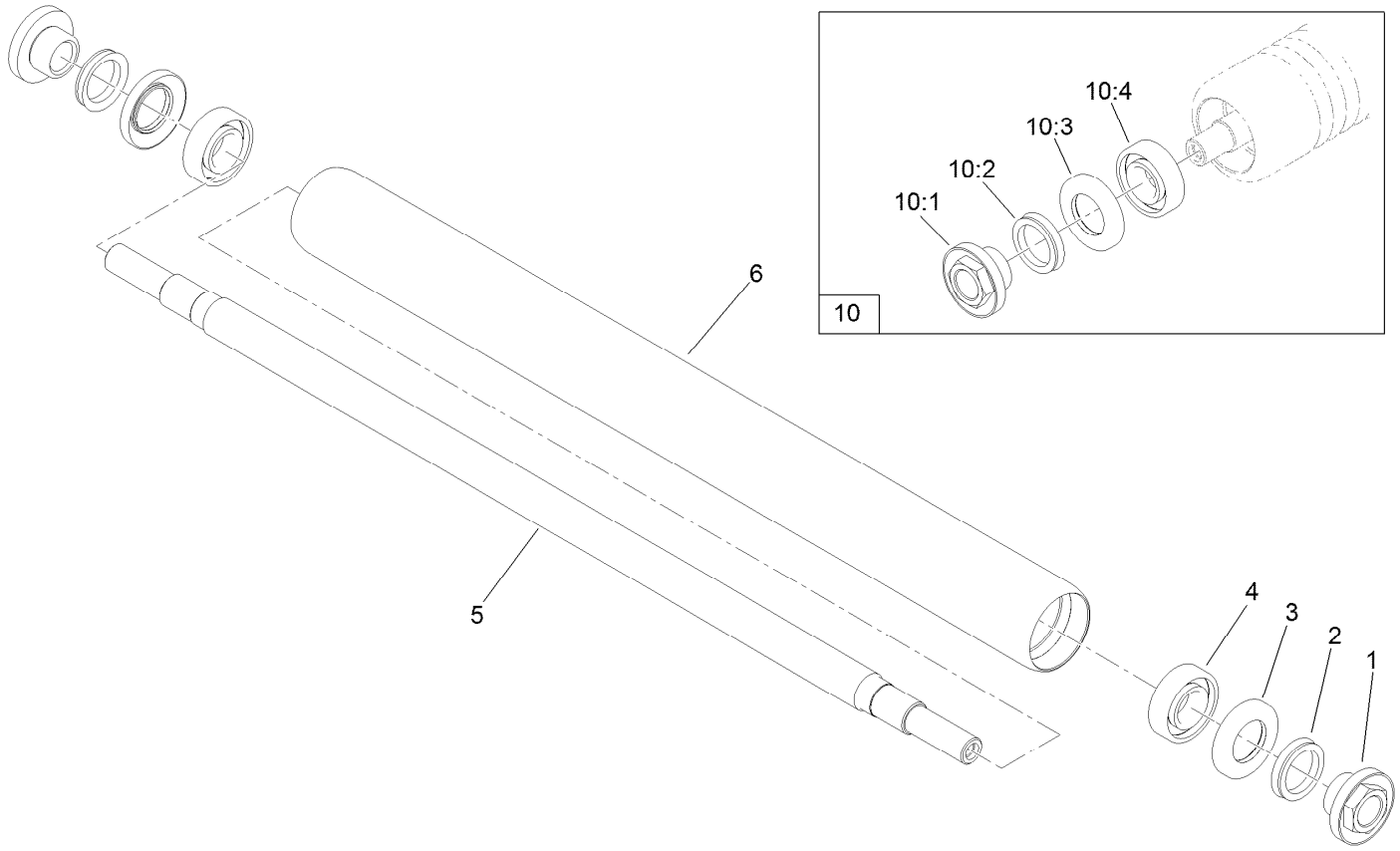

Rear Full Smooth Roller Kit Assembly No. 140-5560

Ref.	*Part Number*	*Qty.*	*Description*
1	108-3151	2	Nut-Lock, Bearing (Service)
2	106-6942	2	V-Ring
3	106-6941	2	Seal
4	251-347	2	Bearing-Ball
5	119-4090	1	Shaft-Roller
6	140-5541	1	Tube Roller 2.0In DIA X 22.15In
10	140-5552	1	GR Roller Rebuild Kit
10:1	108-3151	2	Nut-Lock, Bearing (Service)
10:2	106-6942	2	V-Ring
10:3	106-6941	2	Seal
10:4	251-347	2	Bearing-Ball

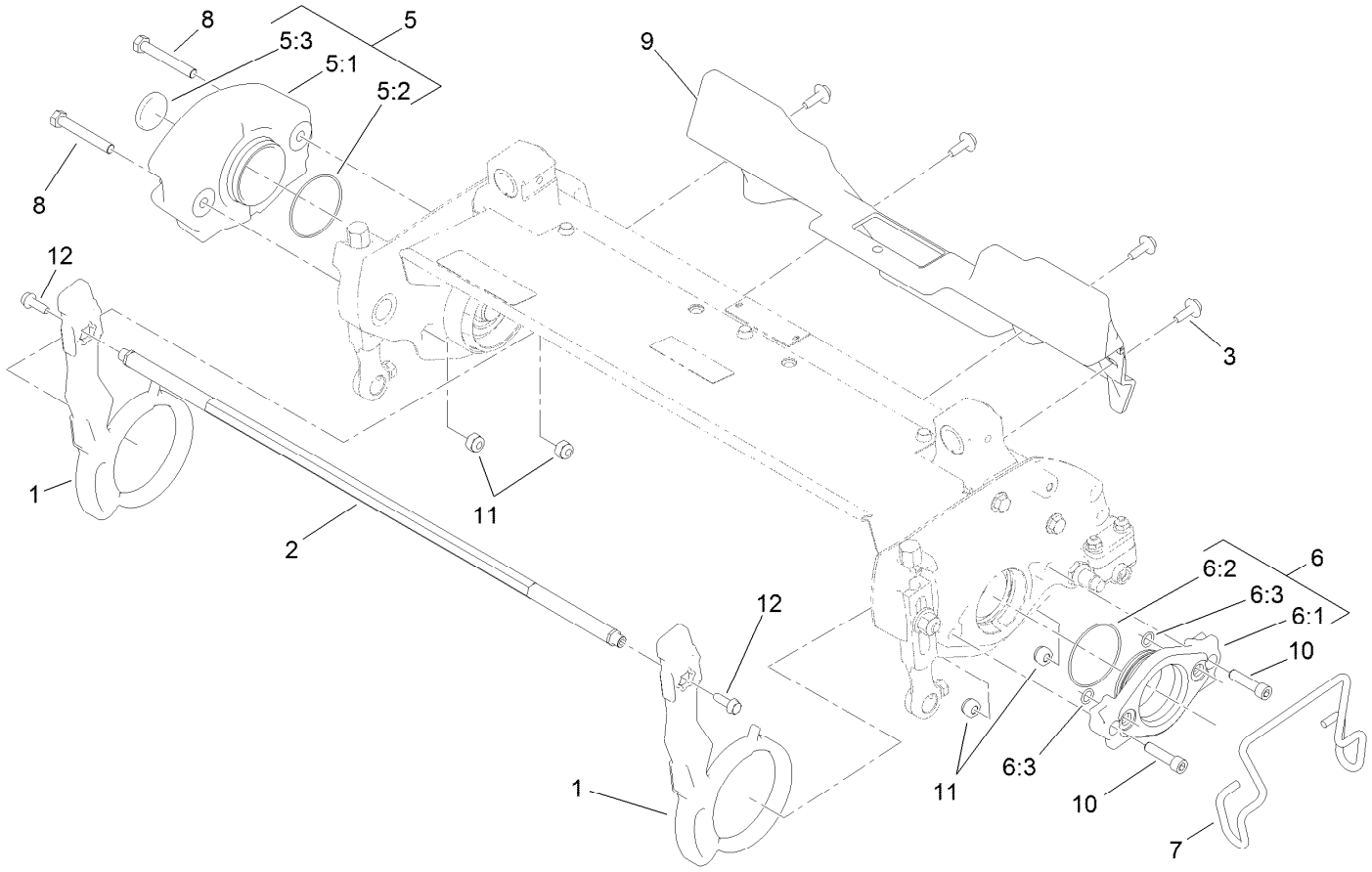

Housing Assembly

Ref.	Part Number	Qty.	Description
1	133-9040	2	Arm-Pitch
2	117-9456	1	Crosslink
3	119-4012	4	Screw-HWHTF
5	115-3340	1	Weight ASM
5:1		1	Weight-Reel ●
5:2	360-0398	1	O-Ring
5:3	121-4609	1	Plug-Expansion
6	115-5227	1	Motor Adapter ASM
6:1	115-3294	1	Adaptor-Motor

Ref.	Part Number	Qty.	Description
6:2	360-0398	1	O-Ring
6:3	237-22	2	O-Ring
7	117-6706	1	Clamp-Motor
8	322-11	2	Screw-HH
9	117-6849	1	Shield-Spring
10	3274-18	2	Screw-HSH
11	119-4038	4	Nut-Hex
12	131-6150	2	Screw-HWHTF

● Not serviced separately

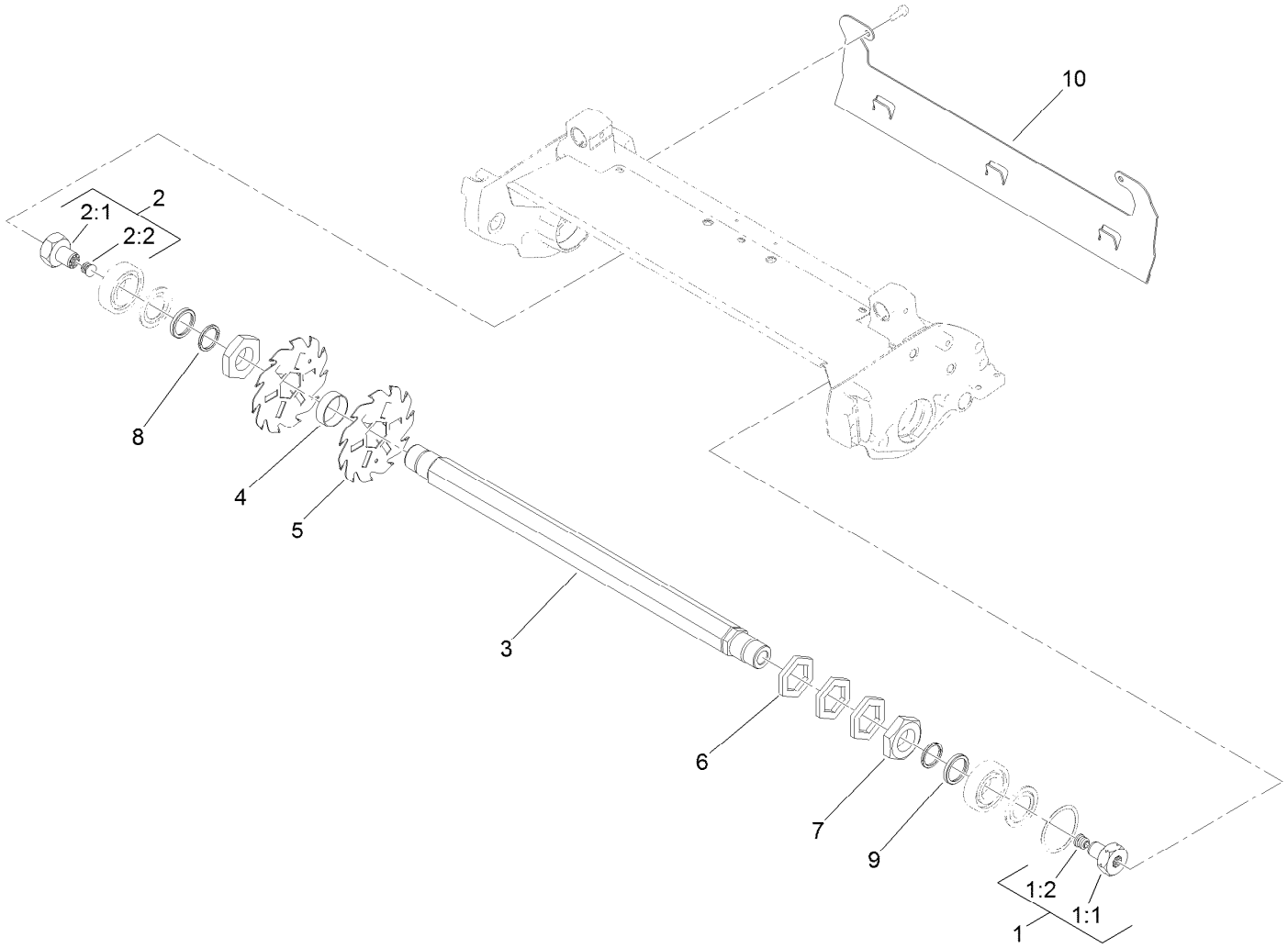

Dethatcher Reel and Drive Assembly

Ref.	Part Number	Qty.	Description
1	117-6828	1	LH Nut ASM
1:1		1	Insert-Threaded, LH ■
1:2	120-3220	1	Plug-Plastic
2	117-6829	1	RH Nut ASM
2:1		1	Insert-Threaded, RH ■
2:2	120-3220	1	Plug-Plastic
3	120-3168	1	Hex Shaft
4	120-3167	36	Spacer
5	117-6824	36	Blade-11 Tooth (1.2 MM Carbide)
5	117-6839	1	Dethatcher Blade Kit (1.2MM Carbide) ●
5	117-6840	1	Dethatcher Blade Kit, 2.Omm Carbide ●

Ref.	Part Number	Qty.	Description
5	119-1128	36	Blade-Ii Tooth (Carbide 2.0MM) ●
5	121-6674	36	Blade-11 Tooth Dethatcher (Spring Steel) ●
5	121-6675	1	Dethatcher Blade Kit (Spring Steel) ●
6	120-3232	3	Hex-Spacer
7	120-3166	2	Nut-Hex
8	119-7423	4	Retainer-Shaft
9	119-1174	2	Spacer
10	121-6676-01	1	Shield-Dethatcher

● Optional Equipment

■ Not serviced separately

Attachments and Accessories

For 04720 Dethatching Unit Greensmaster 3300/3400 Series TriFlex Traction Unit

Product Name	Model/Part
Narrow Wiehle Roller (Qty 1)	04255
Wide Wiehle Roller (Qty 1)	04256
Front Full Smooth Roller (Qty 1)	04257
Extended Narrow Wiehle Roller (Qty 1)	04258
Paspalum Wiehle Roller (Qty 1)	04267
Turf Evaluator	04399
Full Roller Kit (Set of 3)	04625
Narrow Wiehle Roller Kit (Set of 3)	04626
Wide Wiehle Roller Kit (Set of 3)	04627
Steel Roller (Qty 1)	04628
Rear Roller Scraper Kit (Set of 3)	04646
Steel Roller Asm	107-3509
Narrow Wiehle Steel Roller Asm	107-3510
Wide Wiehle Steel Roller Asm	107-3514
Narrow Wiehle Roller Kit	115-7360
Front Brush for Narrow Wiehle Roller (Qty 1)	115-7377
Front Brush for Wide Wiehle Roller (Qty 1)	115-7378
Front Brush for Full Roller (Qty 1)	115-7379
Front Comb for Narrow Wiehle Roller (Qty 1)	115-7380
Front Comb for Wide Wiehle Roller (Qty 1)	115-7381
Front Comb for Full Roller (Qty 1)	115-7382
Wide Wiehle Roller Kit	115-7386
Front Full Smooth Roller Kit	115-7388
Blade-11 Tooth (Carbide, 1.2mm, Qty 1)	117-6824
Blade Kit (Carbide, 1.2mm, Qty 36)	117-6839
Blade Kit (Carbide, 2.0mm, Qty 36)	117-6840
Blade-11 Tooth (Carbide, 2.0mm, Qty 1)	119-1128
Rear Roller Adjustment (Qty 1)	120-9602
Rear Roller Scraper (Qty 1)	121-2260
Extended Wiehle Roller Kit	121-4675
Blade-11 Tooth (Qty 1)	121-6674
Blade Kit (Spring Steel, Qty 36)	121-6675
Paspalum Wiehle Roller	121-9535
Front Scraper for Narrow Wiehle Roller (Qty 1)	125-3503
Front Scraper for Wide Wiehle Roller (Qty 1)	125-3504
Front Scraper for Full Roller (Qty 1)	125-3505
Rear Roller Extension Kit (Set of 3)	125-5180
GR Roller Rebuild Kit	140-5552
Roller Rebuild Tool Kit, Greensmaster Cutting Units	140-5553
Full Rear Roller(2.0in Dia)(21in)	140-5560
Cast Iron Wiehle Roller (Qty 1)	71-1550
Height-of-Cut Bar	94-9010

Notes:

TORO®

Count on it.