Multi Pro® 5800-D Turf Sprayer with ExcelaRate® Spray System

Model No. 41393—Serial No. 400966414 and Up
Model No. 41393TE—Serial No. 400000000 and Up
Model No. 41394—Serial No. 400966414 and Up
Model No. 41394CA—Serial No. 400000000 and Up

Hydraulic Schematic

Model No. 41393 and 41394
137-4207 Rev A
1 of 1

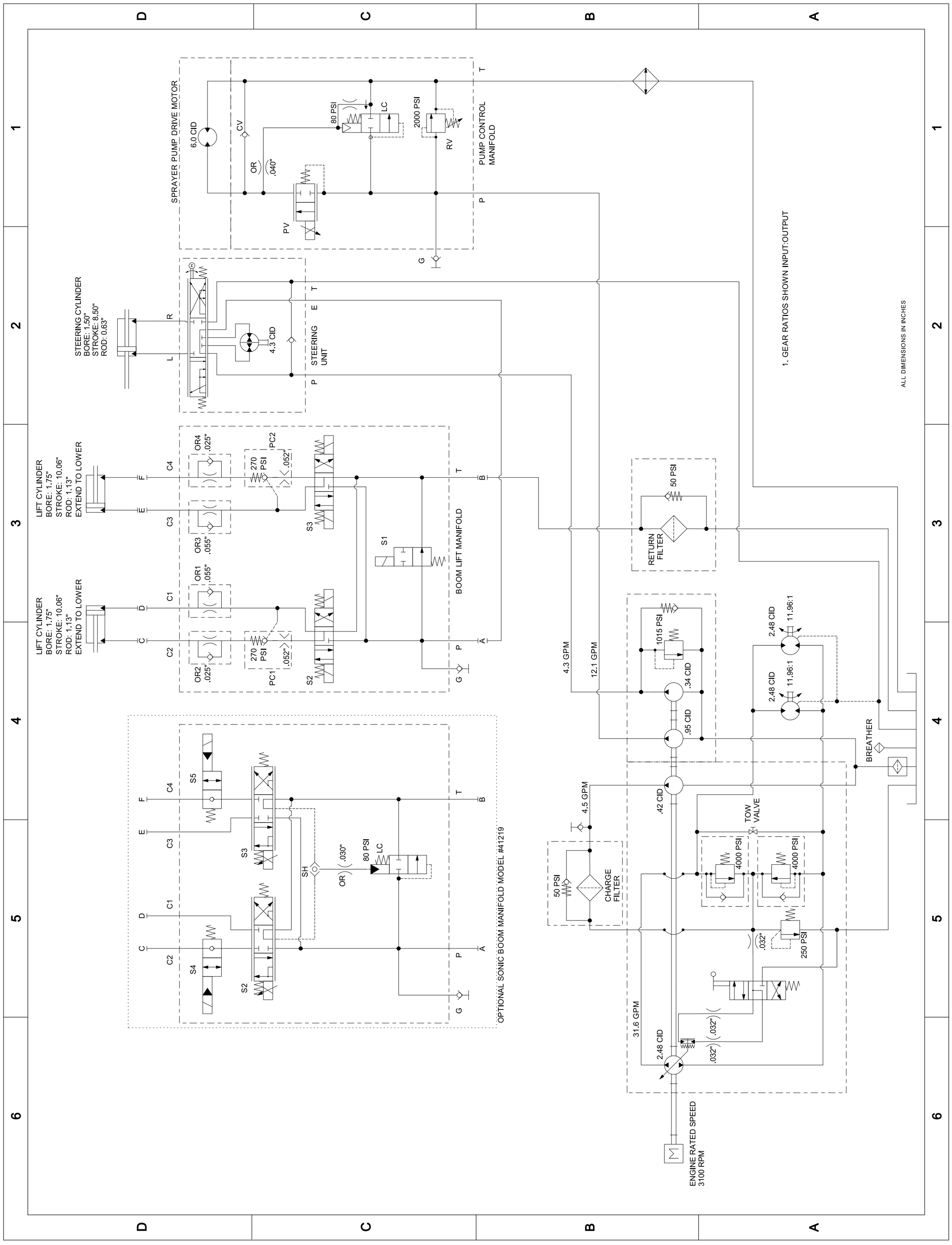

g323457